KAMOUFLAGE

Aesthetic smoke evacuation shutter.

SMS
SMOKE MANAGEMENT SYSTEMS

CE 1812

NF

Smoke Management Systems Ltd.
Unit 2, Kilcarbery Park, New Nangor Rd.
Clondalkin, Dublin D22K207, Rep of Ireland
info@smokemanagement.ie
www.smokemanagement.ie

Table of content

Declaration of performance 4
Product presentation KAMOUFLAGE 5
Variant KAMOUFLAGE 1V 6
Range and dimensions KAMOUFLAGE 1V 6
Variant KAMOUFLAGE 2V 6
Range and dimensions KAMOUFLAGE 2V 6
Evolution - kits 7
Options - at the time of order 8
Storage and handling 9
Installation 9
- Operation: manual opening 10
- Operation: manual closing 11
- Electrical connection 13, 29
- Position in the shaft 14
- Shock absorbers for the doors 15
- Installation into vertical concrete shaft with mounting frame 16
- Installation into vertical concrete shaft without mounting frame 18
- Installation into vertical shaft with built-in mounting frame: general instructions for all types of shafts (other than concrete) 19
- Installation into vertical shaft (without a mounting frame): general instructions for all types of shafts (other than concrete) 20
- Installation into vertical shaft PROMATECT L500 21
- Installation into vertical shaft GEOFLAM (LIGHT) / GEOTEC 22
- Installation into vertical shaft TECNIVER 23
- Installation into vertical shaft GLASROC F V500 24
- Installation into vertical shaft EXTHAMAT 25
- Installation into vertical shaft DESENFIRE (HD/THD/STR) 26
- Installation at minimal distances 27
- Finishing 28

Operation and mechanisms 29
Electrical connection 29
Weights 30
Selection data 33
Sample order 35
Approvals and certificates 35

Smoke Management Systems Ltd.
Unit 2, Kilcarbery Park, New Nangor Rd.
Clondalkin, Dublin D22K207, Rep of Ireland
info@smokemanagement.ie
www.smokemanagement.ie

Explanation of the abbreviations and pictograms

Wn = nominal width
Hn = nominal height
Sn = free air passage
E = integrity
I = thermal insulation
S = smoke leakage
60/120 = fire resistance time
Pa = pascal
o -> i = meets the criteria from the outside (o) to the inside (i)
i <-> o = fire side not important
AA = automatic activation
multi = multi compartment
1500 = pressure level 3 (1500Pa)
ved = vertical duct
hod = horizontal duct
vew = vertical wall penetration
V = volt
W = watt
V AC = Volt alternating current
V DC = Volt direct current
E.TELE = power supply magnet
E.ALIM = power supply motor
Auto = automatic
Tele = remote controlled
Pnom = nominal capacity
Pmax = maximum capacity
DAS MOD = modular product
OP = option (delivered with the product)
KIT = kit (delivered separately for repair or upgrade)
PG = connection flange to the duct
GKB (type A) / GKF (type F): "GKB" stands for standard plasterboards (type A according to EN 520) while "GKF" plasterboards offer a higher fire resistance for a similar plate thickness (type F according to EN 520)
Cal-Sil = calcium silicate
ζ [-] = pressure loss coefficient
Q = air flow
ΔP = static pressure drop
v = air speed in the duct
Lwa = A-weighted sound power level
ME = motorised
H = habitat

	aesthetic solution		optimal acoustic performance
	optimal free air passage and minimal pressure loss	-1500 Pa	superior air tightness (tested at 1500 Pa)
	intermediate dimensions on request		winner of the French "Janus de l'Industrie" award

Smoke Management Systems Ltd.
Unit 2, Kilcarbery Park, New Nangor Rd.
Clondalkin, Dublin D22K207, Rep of Ireland
info@smokemanagement.ie
www.smokemanagement.ie

DECLARATION OF PERFORMANCE

1. Unique identification code of the product-type:	**KAMOUFLAGE**
2. Intended use/es:	Smoke evacuation shutter to be used in smoke control systems, in multi-compartment applications at fire temperatures, or in single-compartment applications.
3. Manufacturer:	Rf-Technologies NV, Lange Ambachtstraat 40, B-9860 Oosterzele
4. System/s of AVCP:	System 1
5. Harmonised standard / European Assessment Document; notified body / European Technical Assessment, Technical Assessment Body, notified body; certificate of constancy of performance:	EN 12101-8:2011, Efectis with identification number 1812; Efectis_1812_CPR_1043
6. Declared performance according to EN 12101-8:2011	(fire resistance according to EN 1366-10, classification according to EN 13501-4)

Essential characteristics					Performance
Range	**Product**	**Shaft type**	**Shaft**	**Installation**	**Classification**
300x385 mm ≤ Kamouflage 1V ≤ 700x1075 mm; 350x385 mm ≤ Kamouflage 2V ≤ 1100x1105 mm	Kamouflage 60	Shaft	Promatect L500 ≥ 30 mm	1	EI 60 (v_{ed} i ↔ o) S 1500 AA multi
			Geoflam ≥ 30 mm		
			Geotec ≥ 30 mm		
			Tecniver ≥ 35 mm		
			Glasroc F V500 ≥ 35 mm		
			Exthamat ≥ 25 mm		
			Desenfire HD ≥ 25 mm HD		
			Concrete ≥ 70 mm		
			Masonry, concrete blocks, concrete ≥ 100 mm		
	Kamouflage 120	Shaft	Promatect L500 ≥ 40 mm	1	EI 90 (v_{ed} i ↔ o) S 1500 AA multi
			Geoflam ≥ 35 mm		
			Tecniver ≥ 45 mm		
			Exthamat ≥ 30 mm		
			Desenfire ≥ 25 mm THD		
			Concrete ≥ 70 mm		
			Masonry, concrete blocks, concrete ≥ 100 mm		
	Kamouflage 120	Shaft	Promatect L500 ≥ 50 mm	1	EI 120 (v_{ed} i ↔ o) S 1500 AA multi
			Geoflam ≥ 45 mm		
			Geoflam Light ≥ 35 mm		
			Geotec ≥ 45 mm		
			Exthamat ≥ 35 mm		
			Tecniver ≥ 50 mm		
			Glasroc F V500 ≥ 50 mm		
			Desenfire HD ≥ 35 mm		
			Desenfire ≥ 45 mm		
			Desenfire STR ≥ 25 mm		
			Masonry, concrete blocks, concrete ≥ 100 mm		

1 Type of installation: shaft-mounted 0/180°. Minimal in-between distances authorised.

Harmonised standard
EN 12101-8:2011

Nominal activation conditions/sensitivity:	Pass - automatic activation
Response delay (response time): closure time	Pass - automatic activation
Operational reliability: cycling	300 cycles (no load)
Durability of response delay:	Pass
Durability of operational reliability:	Pass
Approved accessories	Acrylic paint on the leaf and synthetic paint on the frame on the side not exposed to fire; Glued wall paper on the side not exposed to fire; ATOUT RAL 9010; ATOUT ALU; EASY-KAP or EASY-KGC mounting frame; with or without mastic seal; Antifall device type KGD
High operational temperature (HOT 400/30):	NPD (no performance determined)

The performance of the product identified above is in conformity with the set of declared performance/s. This declaration of performance is issued, in accordance with Regulation (EU) No 305/2011, under the sole responsibility of the manufacturer identified above.

Signed for and on behalf of the manufacturer by:
Mathieu Steenland, Technical Manager

Oosterzele, 11/2019

Smoke Management Systems Ltd.
Unit 2, Kilcarbery Park, New Nangor Rd.
Clondalkin, Dublin D22K207, Rep of Ireland
info@smokemanagement.ie
www.smokemanagement.ie

Product presentation KAMOUFLAGE

The smoke evacuation shutter Kamouflage is unique through its aesthetic finish, its air-tightness, and its high thermal and acoustic insulation. Its outer face consists of a plasterboard panel enabling a decorative finish to be applied to match the adjacent wall finish. In addition to single and double shutter units (1V/2V) for vertical wall installation, the Kamouflage P model (NT-V14) is suitable for ceiling mounting into the bottom of smoke shafts. Developed in accordance with the European product standard EN 12101-8 and tested according to the EN 1366-10 standard, Kamouflage offers a fire-resistance of 60 or 120 minutes, and ensures a minimal pressure loss.

Smoke evacuation shutters and dampers are suitable for use in ventilating protected lobbies, venting to shafts either naturally or mechanically. They open to evacuate smoke in emergency situations whilst maintaining fire resistant integrity in standby position.

- ☑ aesthetic solution
- ☑ modern look: either select the ready-to-install product with white laquered or aluminium finish, or cover with paint or wallpaper
- ☑ superior air tightness (tested at 1500 Pa)
- ☑ thermal and acoustic insulation
- ☑ optimal free air passage and minimal pressure loss
- ☑ 2V model with simplified manual reset (closing)
- ☑ frame available with primer
- ☑ integrated blocking mechanism
- ☑ large dimensions

- ■ tested according to EN 1366-10
- ■ compliant with EN 12101-8
- ■ approved for installation in calcium-silicate, 'Staff', Tecniver, Glasroc and concrete shafts
- ■ maintenance-free
- ■ for indoor use
- ■ winner of the French "Janus de l'Industrie" award
- ■ intermediate dimensions on request
- ■ reversible (hinges left or right)

1. 1 shutter (1V) / 2 shutters (2V)
2. frame in anodised aluminium (standard or ATOUT ALU) / with primer (PRIM) / white laquered (ATOUT RAL9010)
3. lock + key
4. connection compartment
5. blocking mechanism + automatic locking at 90°
6. product identification

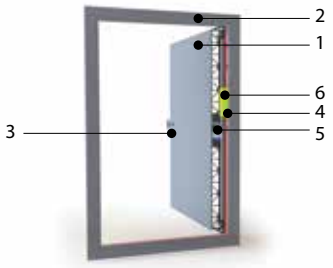

Smoke Management Systems Ltd.
Unit 2, Kilcarbery Park, New Nangor Rd.
Clondalkin, Dublin D22K207, Rep of Ireland
info@smokemanagement.ie
www.smokemanagement.ie

Range and dimensions

Variant KAMOUFLAGE 1V60 - 1V120

Kamouflage aesthetic smoke evacuation shutter, single (1V) shutter unit.

- 1 shutter
- fire resistance till 60 minutes / 120 minutes

Range and dimensions KAMOUFLAGE 1V60 - 1V120

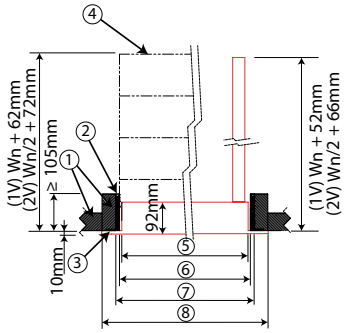

1. Refractory material
2. Sealing if mounting frame
3. Mounting frame (optional)
4. EASY-KGC mounting frame with drop guard (optional)
5. Nominal dimensions shutter Wn x Hn
6. Built-in dimensions without mounting frame (Wn+10) x (Hn+10)mm
7. Built-in dimensions with KAP mounting frame (Wn+20) x (Hn+20)mm
8. Overall (outside) dimensions of the shutter (Wn+54) x (Hn+54)mm

	≥	≤
(Wn x Hn) mm	300x385	700x1075

Variant KAMOUFLAGE 2V60 - 2V120

Kamouflage aesthetic smoke evacuation shutter, double (2V) shutter unit.

- 2 shutters
- fire resistance till 60 minutes / 120 minutes

1. 2 shutters (2V)
2. frame in anodised aluminium (standard or ATOUT ALU) / with primer (PRIM) / white laquered (ATOUT RAL9010)
3. lock + key
4. connection compartment
5. blocking mechanism + automatic locking at 90°
6. product identification
7. central support (2V)

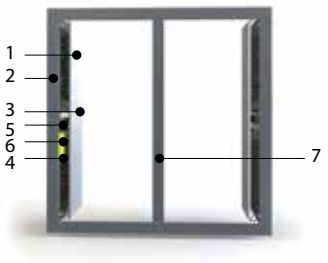

Range and dimensions KAMOUFLAGE 2V60 - 2V120

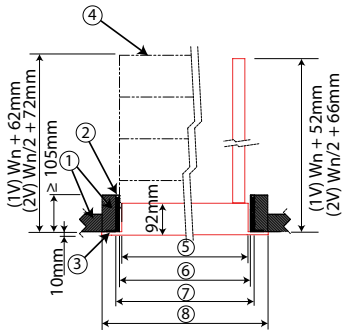

1. Refractory material
2. Sealing if mounting frame
3. Mounting frame (optional)
4. EASY-KGC mounting frame with drop guard (optional)
5. Nominal dimensions shutter Wn x Hn
6. Built-in dimensions without mounting frame (Wn+10) x (Hn+10)mm
7. Built-in dimensions with KAP mounting frame (Wn+20) x (Hn+20)mm
8. Overall (outside) dimensions of the shutter (Wn+54) x (Hn+54)mm

	≥	≤
(Wn x Hn) mm	350x385	1100x1105

Smoke Management Systems Ltd.
Unit 2, Kilcarbery Park, New Nangor Rd.
Clondalkin, Dublin D22K207, Rep of Ireland
info@smokemanagement.ie
www.smokemanagement.ie

	KITS VD24-VA	Natural magnet 24 V DC
	KITS VD48-VA	Natural magnet 48 V DC
	KITS VM24-VA	Electromagnet 24 V DC (not applicable for ME model)
	KITS VM48-VA	Electromagnet 48 V DC (not applicable for ME model)
	KITS FDC-VA	Limit switches 'open/closed'
	EASY-KAP	Mounting frame (delivered separately)
	EASY-KGC 1V	Mounting frame with hinged drop guard grid (delivered separately)
	EASY-KGC 2V	Mounting frame with hinged drop guard grid (delivered separately)

Smoke Management Systems Ltd.
Unit 2, Kilcarbery Park, New Nangor Rd.
Clondalkin, Dublin D22K207, Rep of Ireland
info@smokemanagement.ie
www.smokemanagement.ie

Options - at the time of order

	PRIM	Frame with primer (to facilitate the application of a layer of synthetic paint on the outside of the frame). The shutter is covered with a raw gypsum-cardboard-plate.
	ATOUT 1V RAL9010	Frame painted white and shutter covered with white metallic sheet (RAL 9010 mat)
	ATOUT 2V RAL9010	Frame painted white and shutter covered with white metallic sheet (RAL 9010 mat)
	ATOUT 1V ALU	Frame in anodised aluminium and shutter covered with metallic sheet with aluminium finish (not available on ceiling (P) model)
	ATOUT 2V ALU	Frame in anodised aluminium and shutter covered with metallic sheet with aluminium finish (not available on ceiling (P) model)

As this product is a safety element, it should be stored and handled with care.

Avoid:

- any kind of impact or damage
- contact with water
- deformation of the casing

It is recommended:

- to unload in a dry area
- not to flip or roll the product to move it
- not to use the damper as a scaffold, working table, etc.
- not to store smaller dampers inside larger ones

Installation

General points

- The installation must comply with the installation manual and the classification report.
- The installation of the shaft must comply with the classification report delivered by the shaft manufacturer.
- Axis orientation: see the declaration of performance.
- Avoid the obstruction of adjoining shafts.
- Verify if the blade can move freely.
- Rf-t smoke dampers may be applied to ducts that have been tested according to EN 1366-8 and EN 1366-9 as appropriate, constructed from similar materials with a fire resistance, thickness and density equal or superior to these of the tested materials.
  - ⚠ Caution: when fitting, the product should be handled with care and remain protected from any sealing products.
  - ⚠ Caution: before putting the installation into operation, clean off all the dust and dirt.
  - ⚠ Caution: bear in mind the blade's clearance inside the smoke evacuation duct.

Smoke Management Systems Ltd.
Unit 2, Kilcarbery Park, New Nangor Rd.
Clondalkin, Dublin D22K207, Rep of Ireland
info@smokemanagement.ie
www.smokemanagement.ie

Installation

Operation: manual opening

1

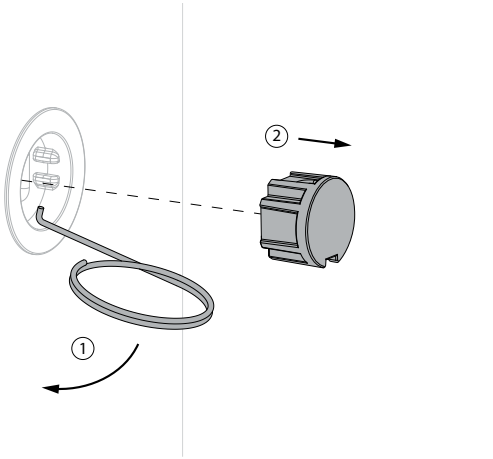

1. Remove the finishing cap from the shutter. To do this, use the hook with key ring that is delivered with the product. You may attach this tool to the key through its handy key ring.

2

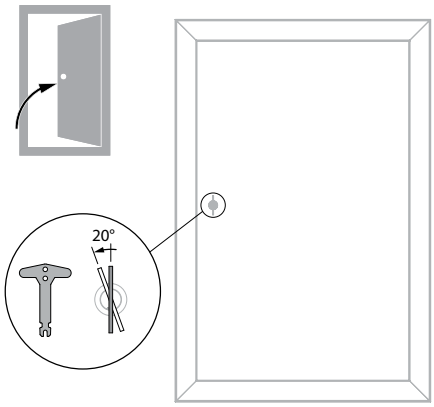

2. Unlocking 1V
Insert the key in the lock. Turn the key 20° anti-clockwise: the shutter opens. Remove the key from the lock.

3

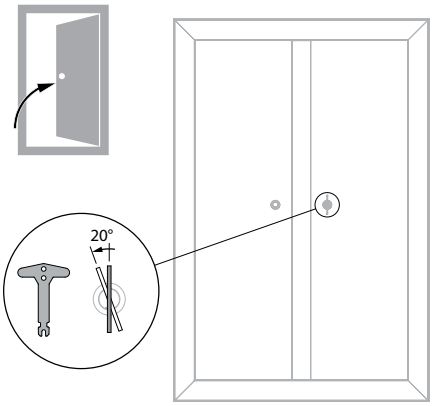

3. Unlocking 2V
Insert the key in the lock. Turn the key 20° anti-clockwise: the shutter opens. Remove the key from the lock.

Operation: manual closing

1

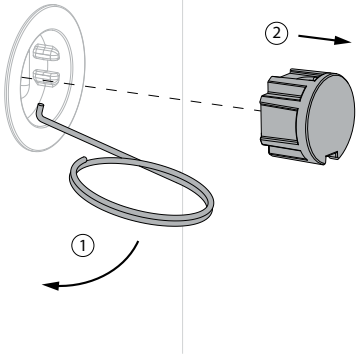

1. Resetting 1V
Remove the finishing cap from the shutter. To do this, use the hook with key ring that is delivered with the product. You may attach this tool to the key through its handy key ring.

2

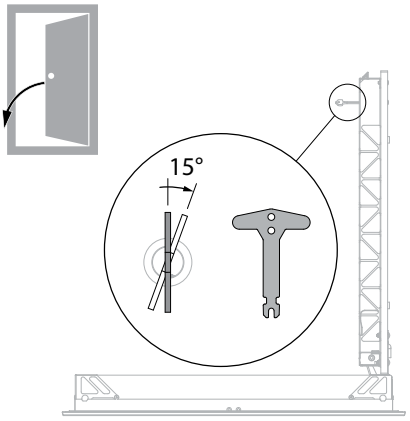

2. Insert the key in the lock. Turn the key 15° clockwise, the key gets blocked in the lock and can be used to pull the shutter.

3

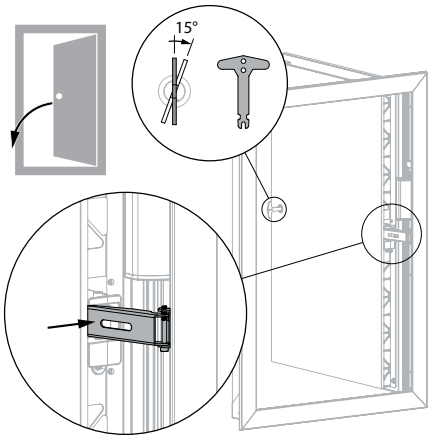

3. Press on the blocking devices.
Close the shutter by pulling at the key.
Turn the key 15° clockwise, the key unblocks from the lock.
Withdraw the key.

4

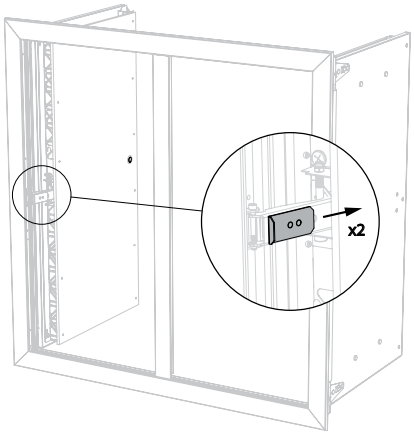

4. Resetting 2V
Press on both blocking devices to deactivate them.

Smoke Management Systems Ltd.
Unit 2, Kilcarbery Park, New Nangor Rd.
Clondalkin, Dublin D22K207, Rep of Ireland
info@smokemanagement.ie
www.smokemanagement.ie

Installation

5

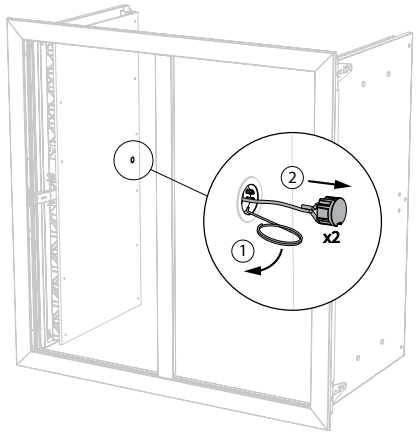

5. Remove the finishing cap from the shutter. To do this, use the hook with key ring that is delivered with the product. You may attach this tool to the key through its handy key ring.

6

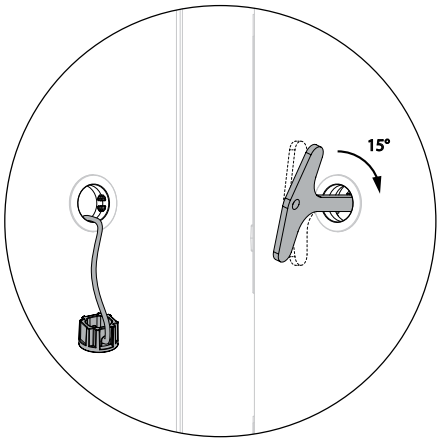

6. Insert the key in the lock in the second shutter. Turn the key 15° clockwise, the key gets blocked in the lock and can be used to pull the shutter.

7

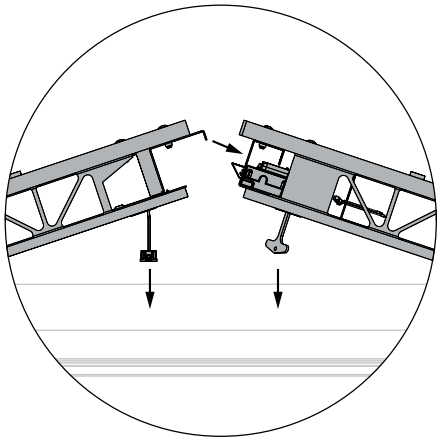

7. Pull both shutters towards you with the key and the cord that is attached to the cap. Make sure that the shutters hook in each other as illustrated. Turn the key 15° counter clock wise, the key unblocks from the lock. Withdraw the key and put the finishing caps back in place.

Electrical connection

1

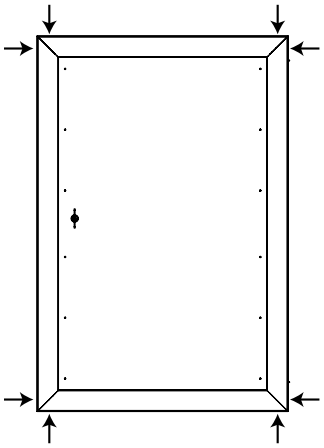

1. The electrical supply can be done at the 4 corners of the shutter.

2

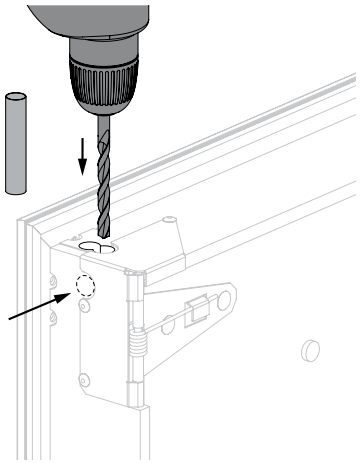

2. Drill a hole in the refractory material at the chosen corner(s). The galvanised part at the inside of the shutter is already indented.

⚠ Caution: after passing and fixing the cables, you need to seal the drilled hole in the refractory plates around the electrical cables with fire resistant adhesive sealant (BCM f.e.).

3

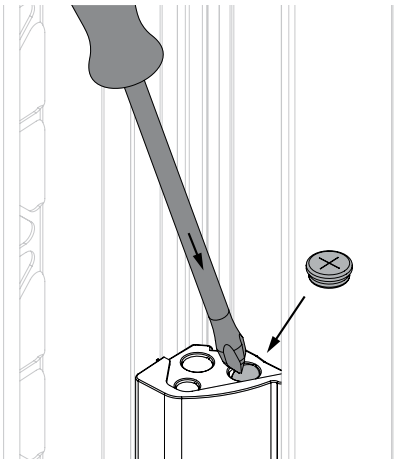

3. Pierce an opening in the connection box. Affix the grommet delivered with the product.

4

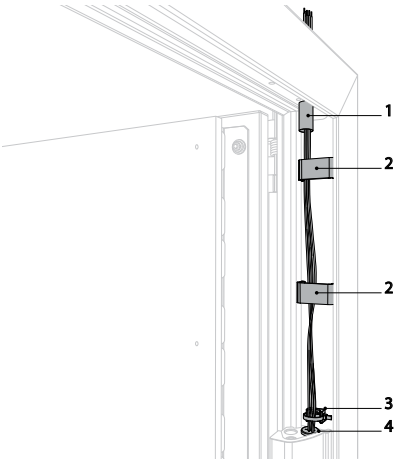

4. Lead the cables through the opening. Use the protective sleeve (1), the fixation clips (2) and the plastic cable clamp (3) to attach the cables to the frame. Lead the cables to the connection box through the grommet (4) and connect according to the electrical connection diagram.
Comply with the installation rules according to article 6.1 of NF S 61-932.

Smoke Management Systems Ltd.
Unit 2, Kilcarbery Park, New Nangor Rd.
Clondalkin, Dublin D22K207, Rep of Ireland
info@smokemanagement.ie
www.smokemanagement.ie

Installation

Position in the shaft

1

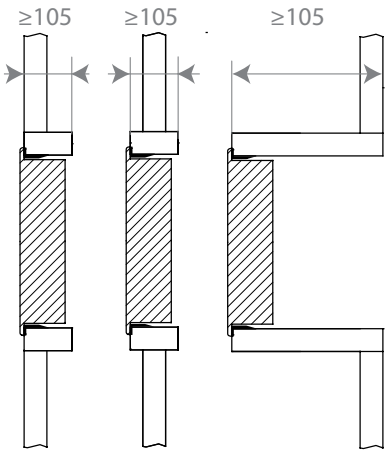

2

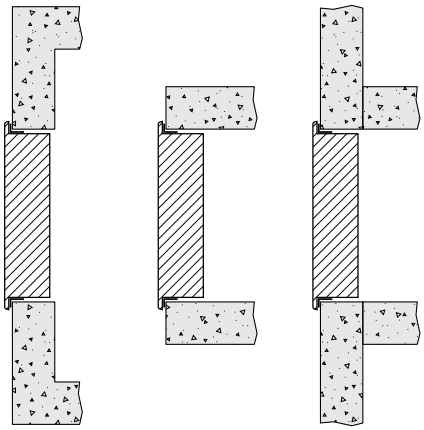

1. The shutter is fixed in the opening. It can be placed either in the shaft, in the axis of the shaft, outside the shaft or the shaft extension or surface-mounted.

3

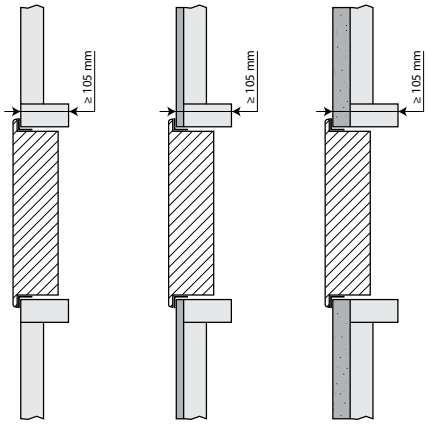

4

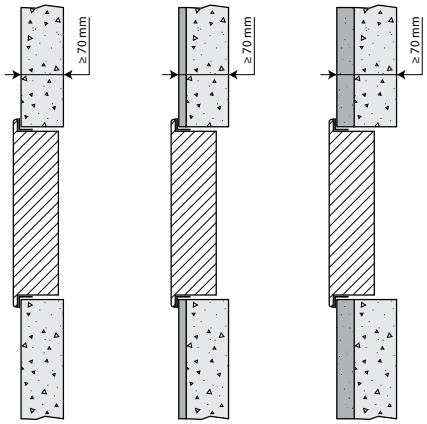

5

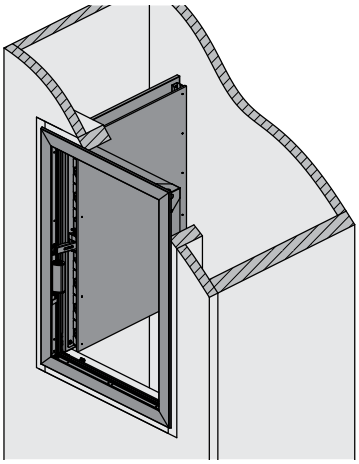

6

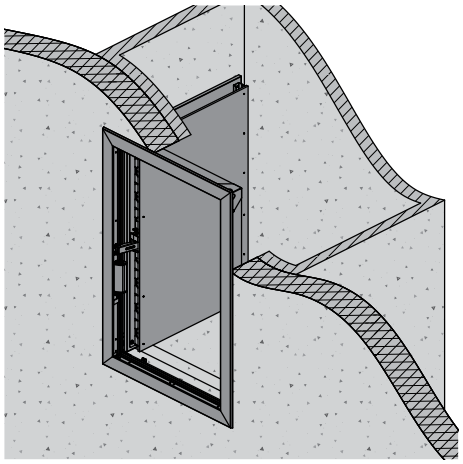

Smoke Management Systems Ltd.
Unit 2, Kilcarbery Park, New Nangor Rd.
Clondalkin, Dublin D22K207, Rep of Ireland
info@smokemanagement.ie
www.smokemanagement.ie

Shock absorbers for the doors

1

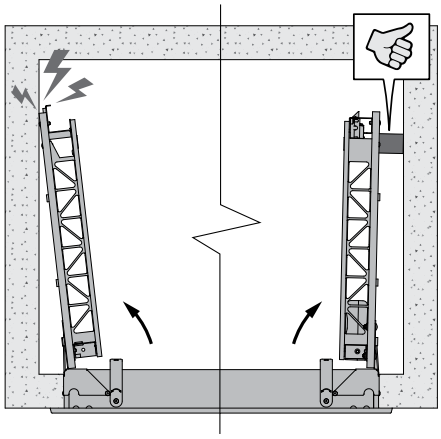

1. Shock absorbers (foam) come standard with the shutter. They can be affixed to the inner face of the door to prevent it from hitting the shaft wall when opening.

2

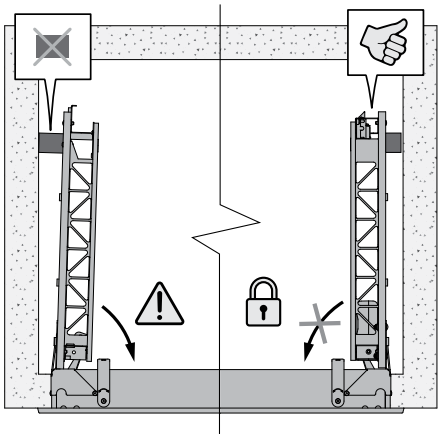

2. Be sure to cut these blocks to the correct dimensions so that the blocking mechanism can engage when the door opens.

Smoke Management Systems Ltd.
Unit 2, Kilcarbery Park, New Nangor Rd.
Clondalkin, Dublin D22K207, Rep of Ireland
info@smokemanagement.ie
www.smokemanagement.ie

Installation

Installation into vertical concrete shaft with mounting frame

The product was tested and approved in:

Product	Range	Wall type		Classification
Kamouflage 60	300x385 mm ≤ Kamouflage 1V ≤ 700x1075 mm; 350x385 mm ≤ Kamouflage 2V ≤ 1100x1105 mm	Shaft	Concrete ≥ 70 mm	EI 60 (v_{ed} i ↔ o) S 1500 AA multi
Kamouflage 120	300x385 mm ≤ Kamouflage 1V ≤ 700x1075 mm; 350x385 mm ≤ Kamouflage 2V ≤ 1100x1105 mm	Shaft	Concrete ≥ 70 mm	EI 90 (v_{ed} i ↔ o) S 1500 AA multi
Kamouflage 60	300x385 mm ≤ Kamouflage 1V ≤ 700x1075 mm; 350x385 mm ≤ Kamouflage 2V ≤ 1100x1105 mm	Shaft	Masonry, concrete blocks, concrete ≥ 100 mm	EI 60 (v_{ed} i ↔ o) S 1500 AA multi
Kamouflage 120	300x385 mm ≤ Kamouflage 1V ≤ 700x1075 mm; 350x385 mm ≤ Kamouflage 2V ≤ 1100x1105 mm	Shaft	Masonry, concrete blocks, concrete ≥ 100 mm	EI 90 (v_{ed} i ↔ o) S 1500 AA multi
Kamouflage 120	300x385 mm ≤ Kamouflage 1V ≤ 700x1075 mm; 350x385 mm ≤ Kamouflage 2V ≤ 1100x1105 mm	Shaft	Masonry, concrete blocks, concrete ≥ 100 mm	EI 120 (v_{ed} i ↔ o) S 1500 AA multi

1

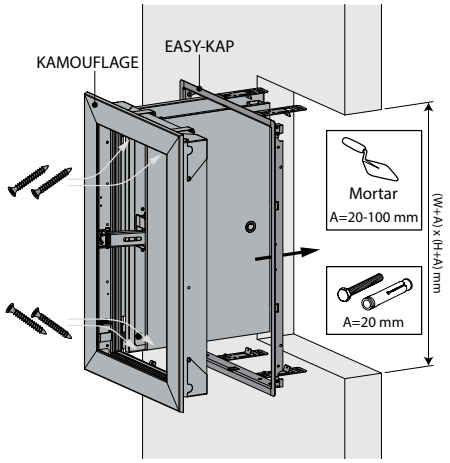

1. In case the mounting frame is screwed:
Make an opening with dimensions (W+20) x (H+20) mm.
In case the mounting frame is fixed with mortar:
Make an opening with dimensions (W+20) x (H+20) mm till (W+100) x (H+100) mm.

2

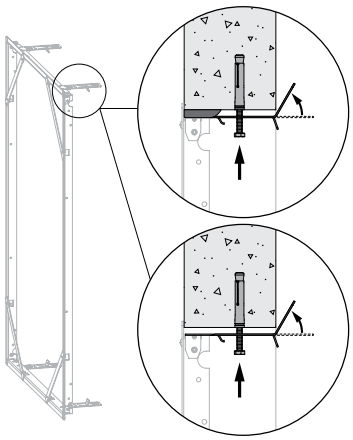

2. The mounting frame should always be fastened to the concrete shaft with screws and dowels (Ø6 x minimum 60 mm, steel or stainless steel).
For an opening with dimensions up to (W+20) x (H+20) mm:
Two fixing lugs are provided at the bottom and at the top of the mounting frame: fold these against the shaft and fasten the mounting frame with 4 screws Ø6 x 60 mm, taking care not to misshape it. These screws can be inserted through any of the punched holes in the lugs, depending on the thickness of the shaft wall.
The finished opening must have the same size as the mounting frame (W+10) x (H+10) mm.
For an opening with dimensions up to (W+100) x (H+100) mm:
Apply mortar around the opening to reduce the opening to the outer dimensions of the frame, then proceed as mentioned above to fasten the frame into the opening. Make sure that the gap between the frame and the opening is sealed completely with mortar.
The mortar must harden completely before the damper is fastened to the mounting frame.

3

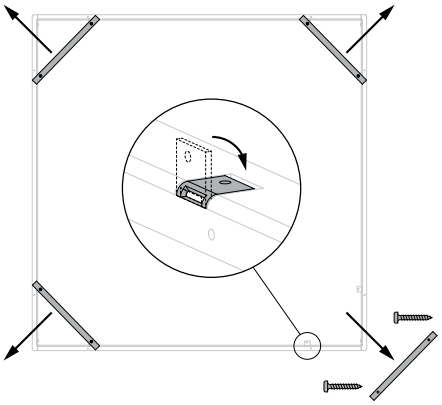

3. Put aside the screws that are affixed to one of the cross slats, then unscrew the 4 cross slats of the mounting frame and fold the 8 fastening plates in the frame.
When the EASY-KGC mounting frame is used, unfold the drop-guard grid (90°) in the shaft.

4

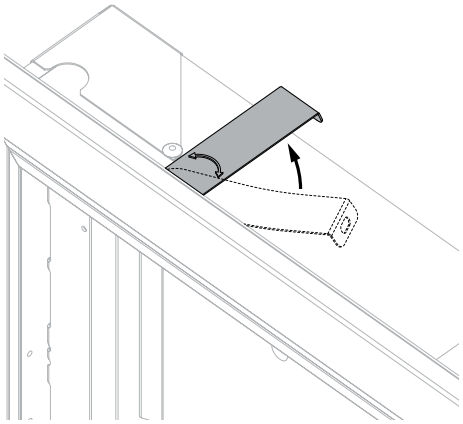

4. Rotate the four fastening plates on the damper 90° (to the upright position).

5

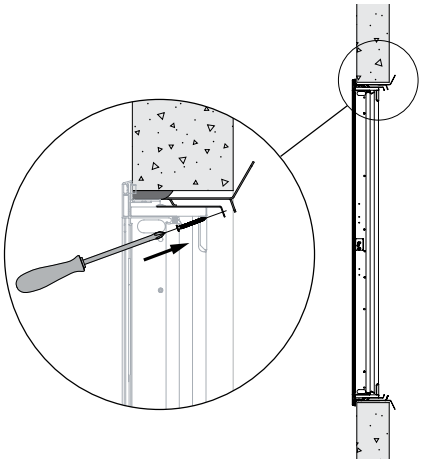

5. Open and position the shutter in the mounting frame. If VM magnet: remove the key from the lock to open the shutter.
Fasten the shutter onto the mounting frame with the 4 screws supplied, as shown in the drawing. Tightening the screws pulls the shutter towards the wall until its final position.
You can also slightly correct the angle of the shutter with respect to the mounting frame.
Connect the mechanism according to the wiring diagram.
Check the mobility of the shutter.

Smoke Management Systems Ltd.
Unit 2, Kilcarbery Park, New Nangor Rd.
Clondalkin, Dublin D22K207, Rep of Ireland
info@smokemanagement.ie
www.smokemanagement.ie

Installation

Installation into vertical concrete shaft without mounting frame

The product was tested and approved in:

Product	Range	Wall type		Classification
Kamouflage 60	300x385 mm ≤ Kamouflage 1V ≤ 700x1075 mm; 350x385 mm ≤ Kamouflage 2V ≤ 1100x1105 mm	Shaft	Concrete ≥ 70 mm	EI 60 (v_{ed} i ↔ o) S 1500 AA multi
Kamouflage 120	300x385 mm ≤ Kamouflage 1V ≤ 700x1075 mm; 350x385 mm ≤ Kamouflage 2V ≤ 1100x1105 mm	Shaft	Concrete ≥ 70 mm	EI 90 (v_{ed} i ↔ o) S 1500 AA multi
Kamouflage 60	300x385 mm ≤ Kamouflage 1V ≤ 700x1075 mm; 350x385 mm ≤ Kamouflage 2V ≤ 1100x1105 mm	Shaft	Masonry, concrete blocks, concrete ≥ 100 mm	EI 60 (v_{ed} i ↔ o) S 1500 AA multi
Kamouflage 120	300x385 mm ≤ Kamouflage 1V ≤ 700x1075 mm; 350x385 mm ≤ Kamouflage 2V ≤ 1100x1105 mm	Shaft	Masonry, concrete blocks, concrete ≥ 100 mm	EI 90 (v_{ed} i ↔ o) S 1500 AA multi
Kamouflage 120	300x385 mm ≤ Kamouflage 1V ≤ 700x1075 mm; 350x385 mm ≤ Kamouflage 2V ≤ 1100x1105 mm	Shaft	Masonry, concrete blocks, concrete ≥ 100 mm	EI 120 (v_{ed} i ↔ o) S 1500 AA multi

1

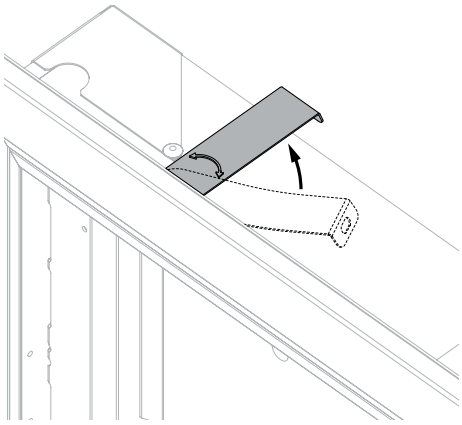

1. Rotate the four fastening plates on the damper 90° (to the upright position).
The fastening plates are not used for an installation without a mounting frame.

2

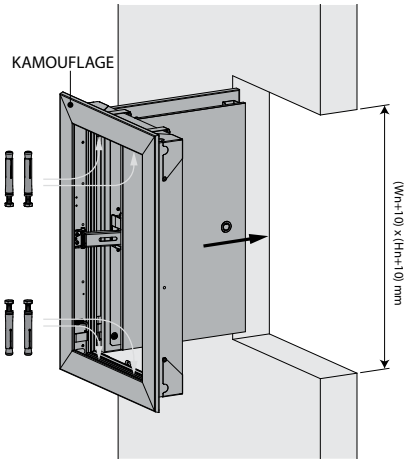

2. Make an opening with dimensions (W+10) x (H+10) mm.
Open and position the shutter in the opening. If VM magnet: remove the key from the lock to open the shutter.
Fix the shutter in the opening using 4 screws and dowels Ø6 x 40 mm.
Connect the mechanism according to the wiring diagram.
Check the mobility of the shutter.

Installation into vertical shaft with built-in mounting frame: general instructions for all types of shafts (other than concrete)

1

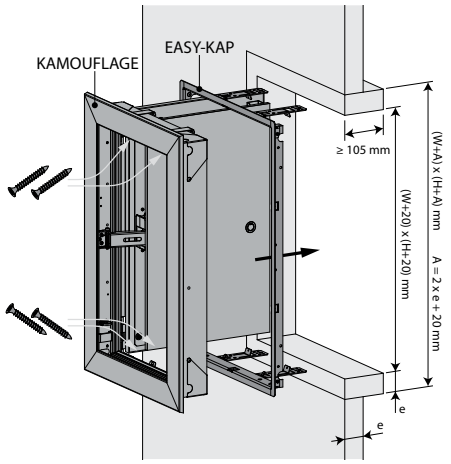

1. Make an opening with dimensions (W+A) x (H+A) mm.
A = 2 x thickness sleeve (e) + 20 mm.
Fit a sleeve of the same type and thickness of the duct (thickness e) of minimum 105 mm deep in the opening.
See details per type of shaft hereafter.

2

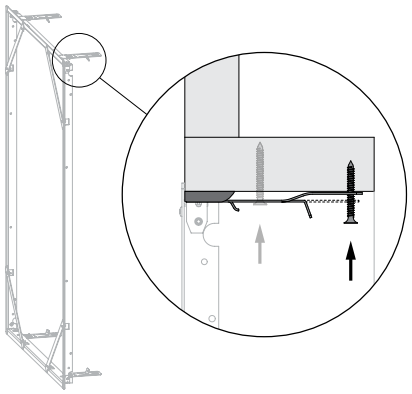

2. Fasten and seal the mounting frame. See details per type of shaft hereafter.
Two fixing lugs are provided at the bottom and at the top of the mounting frame: fold these against the sleeve.
When fixed with screws, fasten the mounting frame to the sleeve with chipboard screws (Ø 6 x e) mm. These screws can be fixed in one of the openings provided for this purpose, depending on the depth of the sleeve.
Take care not to misshape the frame during its installation. The finished opening must have the same size as the mounting frame (W+10) x (H+10) mm.

3

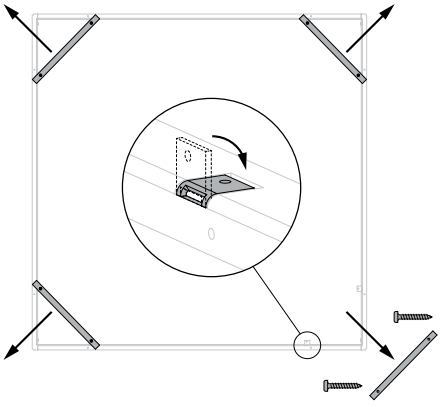

3. Put aside the screws that are affixed to one of the cross slats, then unscrew the 4 cross slats of the mounting frame and fold the 8 fastening plates in the frame.
When the EASY-KGC mounting frame is used, unfold the drop-guard grid (90°) in the shaft.

4

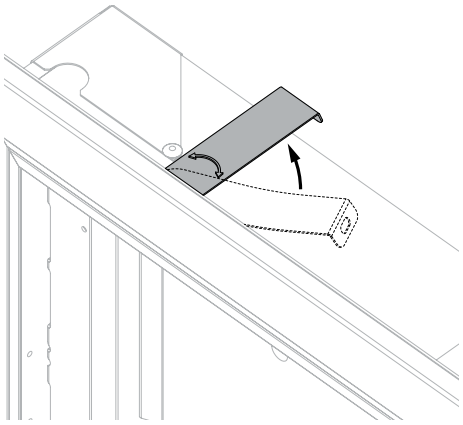

4. Rotate the four fastening plates on the damper 90° (to the upright position).

Smoke Management Systems Ltd.
Unit 2, Kilcarbery Park, New Nangor Rd.
Clondalkin, Dublin D22K207, Rep of Ireland
info@smokemanagement.ie
www.smokemanagement.ie

Installation

5

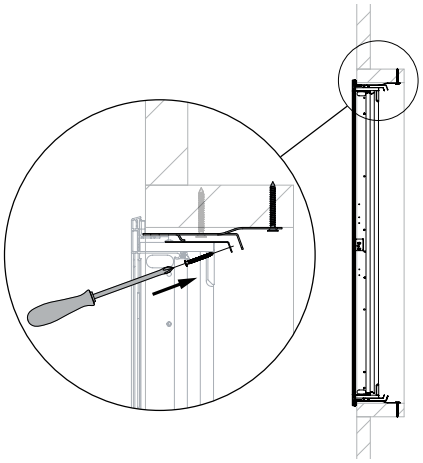

5. Open and position the shutter in the mounting frame. If VM magnet: remove the key from the lock to open the shutter.
Fasten the shutter onto the mounting frame with the 4 screws supplied, as shown in the drawing. Tightening the screws pulls the shutter towards the wall until its final position.
You can also slightly correct the angle of the shutter with respect to the mounting frame.
Connect the mechanism according to the wiring diagram.
Check the mobility of the shutter.

Installation into vertical shaft (without a mounting frame): general instructions for all types of shafts (other than concrete)

1

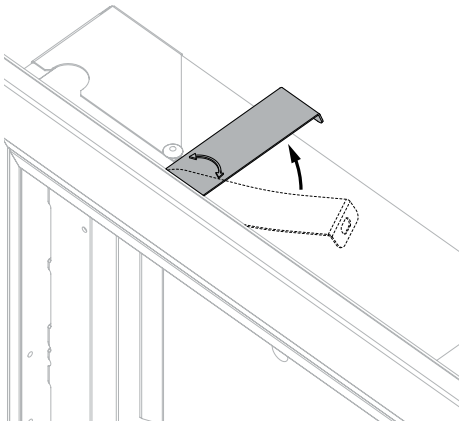

1. Rotate the four fastening plates on the damper 90° (to the upright position).
The fastening plates are not used for an installation without a mounting frame.

2

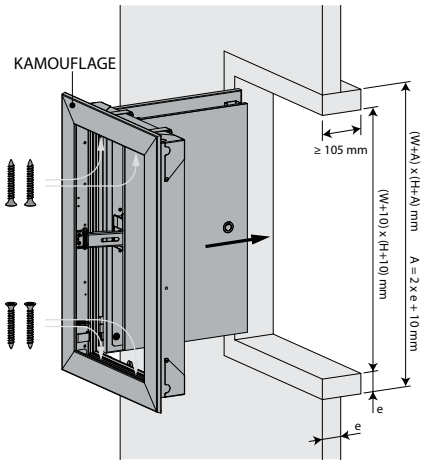

2. Make an opening with dimensions (W+A) x (H+A) mm.
A = 2 x thickness sleeve (e) + 10 mm.
Fit a sleeve of the same type and thickness of the duct (thickness e) of minimum 105 mm deep in the opening.
Open and position the shutter in the opening. If VM magnet: remove the key from the lock to open the shutter.
Fix the shutter in the opening using 4 screws Ø6 x 40 mm.

⚠ Caution: make sure that the screws don't exceed the sleeve's thickness!

Connect the mechanism according to the wiring diagram.
Check the mobility of the shutter.

Installation into vertical shaft PROMATECT L500

The product was tested and approved in:

Product	Range	Wall type		Classification
Kamouflage 60	300x385 mm ≤ Kamouflage 1V ≤ 700x1075 mm; 350x385 mm ≤ Kamouflage 2V ≤ 1100x1105 mm	Shaft	Promatect L500 ≥ 30 mm	EI 60 (v_{ed} i ↔ o) S 1500 AA multi
Kamouflage 120	300x385 mm ≤ Kamouflage 1V ≤ 700x1075 mm; 350x385 mm ≤ Kamouflage 2V ≤ 1100x1105 mm	Shaft	Promatect L500 ≥ 40 mm	EI 90 (v_{ed} i ↔ o) S 1500 AA multi
Kamouflage 120	300x385 mm ≤ Kamouflage 1V ≤ 700x1075 mm; 350x385 mm ≤ Kamouflage 2V ≤ 1100x1105 mm	Shaft	Promatect L500 ≥ 50 mm	EI 120 (v_{ed} i ↔ o) S 1500 AA multi

1

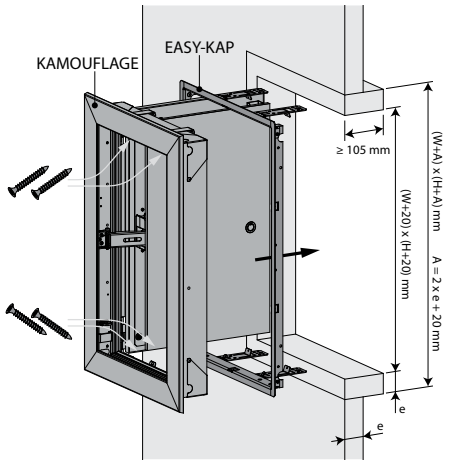

1. Installation with mounting frame:
Assemble the sleeve with staples and affix the assembled sleeve to the shaft wall with staples.
Coat the edges of the opening with adhesive plaster type Promacol S.
Seal the mounting frame with Promacol S taking care not to misshape it.

2

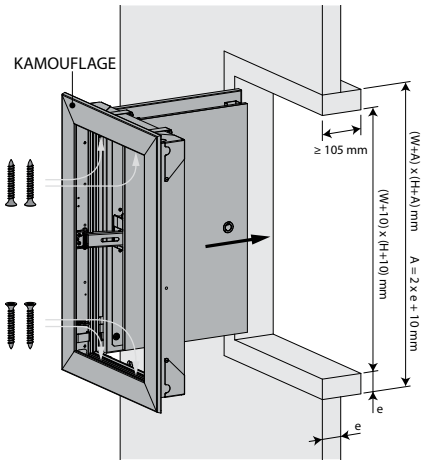

2. Installation without mounting frame:
Assemble the sleeve with staples and affix the assembled sleeve to the shaft wall with staples.

Smoke Management Systems Ltd.
Unit 2, Kilcarbery Park, New Nangor Rd.
Clondalkin, Dublin D22K207, Rep of Ireland
info@smokemanagement.ie
www.smokemanagement.ie

Installation

Installation into vertical shaft GEOFLAM (LIGHT) / GEOTEC

The product was tested and approved in:

Product	Range	Wall type		Classification
Kamouflage 60	300x385 mm ≤ Kamouflage 1V ≤ 700x1075 mm; 350x385 mm ≤ Kamouflage 2V ≤ 1100x1105 mm	Shaft	Geoflam ≥ 30 mm	EI 60 (v_{ed} i ↔ o) S 1500 AA multi
Kamouflage 60	300x385 mm ≤ Kamouflage 1V ≤ 700x1075 mm; 350x385 mm ≤ Kamouflage 2V ≤ 1100x1105 mm	Shaft	Geotec ≥ 30 mm	EI 60 (v_{ed} i ↔ o) S 1500 AA multi
Kamouflage 120	300x385 mm ≤ Kamouflage 1V ≤ 700x1075 mm; 350x385 mm ≤ Kamouflage 2V ≤ 1100x1105 mm	Shaft	Geoflam ≥ 35 mm	EI 90 (v_{ed} i ↔ o) S 1500 AA multi
Kamouflage 120	300x385 mm ≤ Kamouflage 1V ≤ 700x1075 mm; 350x385 mm ≤ Kamouflage 2V ≤ 1100x1105 mm	Shaft	Geoflam ≥ 45 mm	EI 120 (v_{ed} i ↔ o) S 1500 AA multi
Kamouflage 120	300x385 mm ≤ Kamouflage 1V ≤ 700x1075 mm; 350x385 mm ≤ Kamouflage 2V ≤ 1100x1105 mm	Shaft	Geoflam Light ≥ 35 mm	EI 120 (v_{ed} i ↔ o) S 1500 AA multi
Kamouflage 120	300x385 mm ≤ Kamouflage 1V ≤ 700x1075 mm; 350x385 mm ≤ Kamouflage 2V ≤ 1100x1105 mm	Shaft	Geotec ≥ 45 mm	EI 120 (v_{ed} i ↔ o) S 1500 AA multi

1

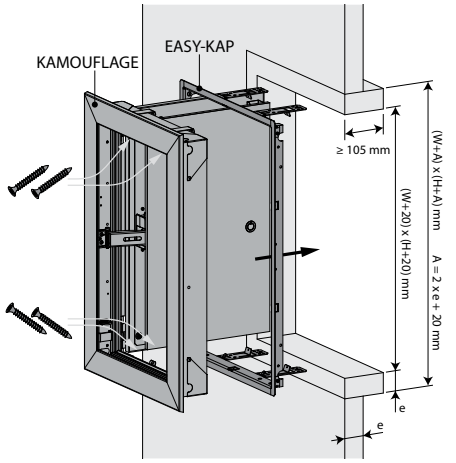

1. Installation with mounting frame:
Coat the edges of the opening with adhesive plaster type PLACOL (in case of Geoflam) or GEOCOL (S) (in case of Geotec). In case of Geotec you can also assemble the sleeve with glue and screws Ø 5 x (2 x e) mm and affix the assembled sleeve to the shaft wall with glue and screws Ø 5 x (2 x e) mm every 100 mm.
Seal the joints between uprights and cross pieces and between the lining and the wall with vegetable fibre caulking and plaster or with GEOCOL (S) (in case of Geotec).
Two fixing lugs are provided at the bottom and at the top of the mounting frame: fold these against the sleeve. Caulk the mounting frame to the duct with vegetable fibre or (in case of Geotec) you can also coat the opening with Geocol (S) and fasten the mounting frame with screws of Ø 5 x e mm. Take care not to misshape the frame. The finished opening must have the same size as the mounting frame (W+10) x (H+10) mm.

2

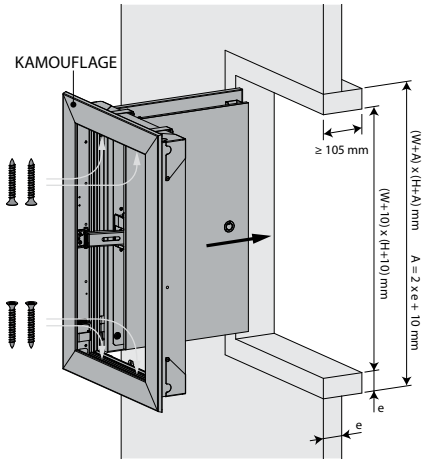

2. Installation without mounting frame:
Coat the edges of the opening with adhesive plaster type PLACOL (in case of Geoflam) or GEOCOL (S) (in case of Geotec). Seal the joints between uprights and cross pieces and between the lining and the wall with vegetable fibre caulking and plaster or with GEOCOL (S) (in case of Geotec).
In case of Geotec you can also assemble the sleeve with glue and screws Ø 5 x (2 x e) mm and affix the assembled sleeve to the shaft wall with glue and screws Ø 5 x (2 x e) mm every 100 mm.

Installation into vertical shaft TECNIVER

The product was tested and approved in:

Product	Range	Wall type		Classification
Kamouflage 60	300x385 mm ≤ Kamouflage 1V ≤ 700x1075 mm; 350x385 mm ≤ Kamouflage 2V ≤ 1100x1105 mm	Shaft	Tecniver ≥ 35 mm	EI 60 (v_{ed} i ↔ o) S 1500 AA multi
Kamouflage 120	300x385 mm ≤ Kamouflage 1V ≤ 700x1075 mm; 350x385 mm ≤ Kamouflage 2V ≤ 1100x1105 mm	Shaft	Tecniver ≥ 45 mm	EI 90 (v_{ed} i ↔ o) S 1500 AA multi
Kamouflage 120	300x385 mm ≤ Kamouflage 1V ≤ 700x1075 mm; 350x385 mm ≤ Kamouflage 2V ≤ 1100x1105 mm	Shaft	Tecniver ≥ 50 mm	EI 120 (v_{ed} i ↔ o) S 1500 AA multi

1

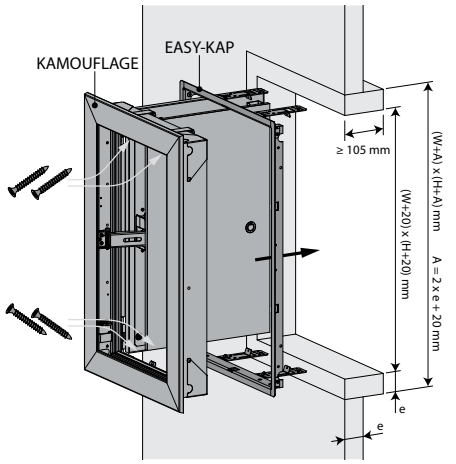

1. Installation with mounting frame:
Put glue type CF GLUE on the uprights and cross pieces and between the lining and the wall. Screw the sleeve using chipboard screws Ø5 x 70 mm at 150 mm intervals.
Two fixing lugs are provided at the bottom and at the top of the mounting frame: fold these against the sleeve. First coat the opening with glue CF GLUE. Glue the mounting frame to the lining taking care not to misshape it. The finished opening must have the same size as the mounting frame (W+10) x (H+10) mm.

2

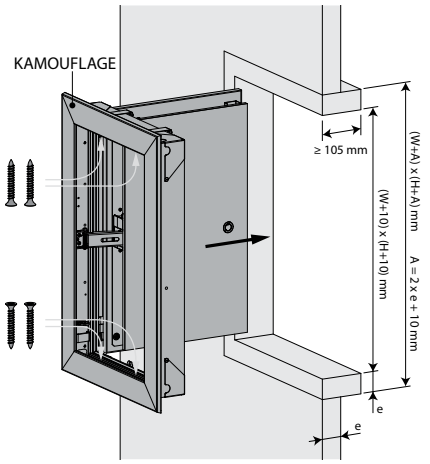

2. Installation without mounting frame:
Put glue type CF GLUE on the uprights and cross pieces and between the lining and the wall. Screw the sleeve using chipboard screws Ø5 x 70 mm at 150 mm intervals.

Smoke Management Systems Ltd.
Unit 2, Kilcarbery Park, New Nangor Rd.
Clondalkin, Dublin D22K207, Rep of Ireland
info@smokemanagement.ie
www.smokemanagement.ie

Installation

Installation into vertical shaft GLASROC F V500

The product was tested and approved in:

Product	Range	Wall type		Classification
Kamouflage 60	300x385 mm ≤ Kamouflage 1V ≤ 700x1075 mm; 350x385 mm ≤ Kamouflage 2V ≤ 1100x1105 mm	Shaft	Glasroc F V500 ≥ 35 mm	EI 60 (v_{ed} i ↔ o) S 1500 AA multi
Kamouflage 120	300x385 mm ≤ Kamouflage 1V ≤ 700x1075 mm; 350x385 mm ≤ Kamouflage 2V ≤ 1100x1105 mm	Shaft	Glasroc F V500 ≥ 50 mm	EI 120 (v_{ed} i ↔ o) S 1500 AA multi

1

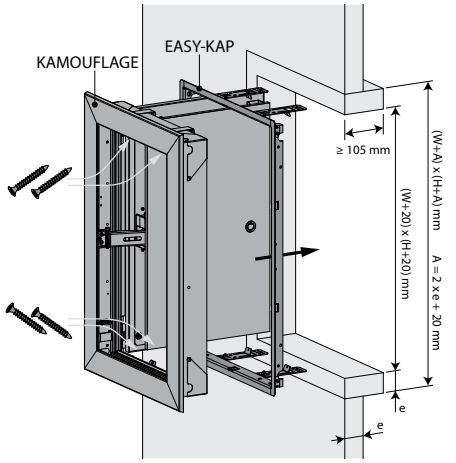

1. Installation with mounting frame:
Put glue type GLASROC F V500 on the uprights and cross pieces and between the lining and the wall. Screw the sleeve using chipboard screws Ø5 x 70 mm at 150 mm intervals.
Two fixing lugs are provided at the bottom and at the top of the mounting frame: fold these against the sleeve. First coat the opening with glue GLASROC F V500. Glue the mounting frame to the lining taking care not to misshape it. The finished opening must have the same size as the mounting frame (W+10) x (H+10) mm.

2

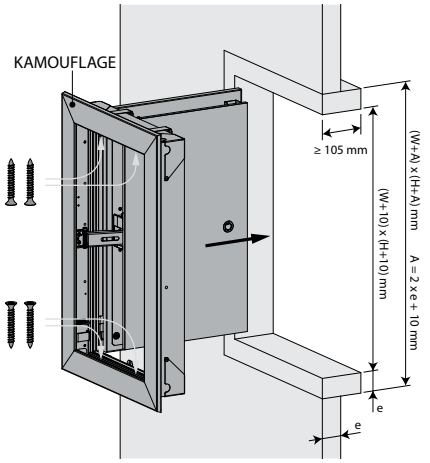

2. Installation without mounting frame:
Put glue type GLASROC F V500 on the uprights and cross pieces and between the lining and the wall. Screw the sleeve using chipboard screws Ø5 x 70 mm at 150 mm intervals.

Installation into vertical shaft EXTHAMAT

The product was tested and approved in:

Product	Range	Wall type		Classification
Kamouflage 60	300x385 mm ≤ Kamouflage 1V ≤ 700x1075 mm; 350x385 mm ≤ Kamouflage 2V ≤ 1100x1105 mm	Shaft	Exthamat ≥ 25 mm	EI 60 (v_{ed} i ↔ o) S 1500 AA multi
Kamouflage 120	300x385 mm ≤ Kamouflage 1V ≤ 700x1075 mm; 350x385 mm ≤ Kamouflage 2V ≤ 1100x1105 mm	Shaft	Exthamat ≥ 30 mm	EI 90 (v_{ed} i ↔ o) S 1500 AA multi
Kamouflage 120	300x385 mm ≤ Kamouflage 1V ≤ 700x1075 mm; 350x385 mm ≤ Kamouflage 2V ≤ 1100x1105 mm	Shaft	Exthamat ≥ 35 mm	EI 120 (v_{ed} i ↔ o) S 1500 AA multi

1

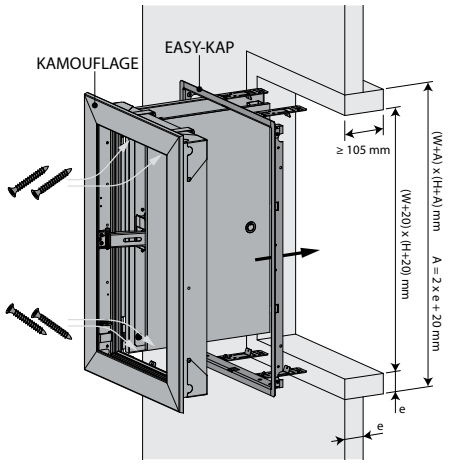

1. Installation with mounting frame:
Coat the edges of the opening with adhesive plaster.
Seal the joints between uprights and cross pieces and between the lining and the wall with vegetable fibre caulking and plaster.
Two fixing lugs are provided at the bottom and at the top of the mounting frame: fold these against the sleeve. Caulk the mounting frame to the duct with vegetable fiber caulking and plaster and taking care not to misshape it. The finished opening must have the same size as the mounting frame (W+10) x (H+10) mm.

2

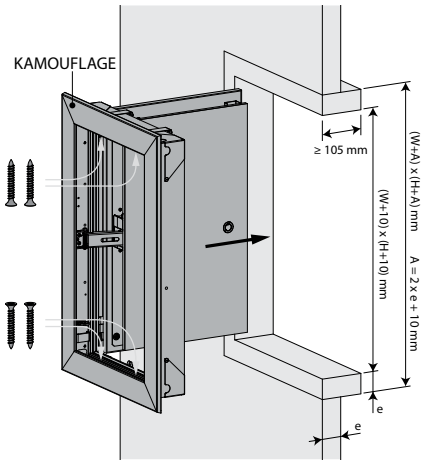

2. Installation without mounting frame:
Coat the edges of the opening with adhesive plaster.
Seal the joints between uprights and cross pieces and between the lining and the wall with vegetable fibre caulking and plaster.

Smoke Management Systems Ltd.
Unit 2, Kilcarbery Park, New Nangor Rd.
Clondalkin, Dublin D22K207, Rep of Ireland
info@smokemanagement.ie
www.smokemanagement.ie

Installation

Installation into vertical shaft DESENFIRE (HD/THD/STR)

The product was tested and approved in:

Product	Range	Wall type		Classification
Kamouflage 60	300x385 mm ≤ Kamouflage 1V ≤ 700x1075 mm; 350x385 mm ≤ Kamouflage 2V ≤ 1100x1105 mm	Shaft	Desenfire HD ≥ 25 mm	EI 60 (v_{ed} i ↔ o) S 1500 AA multi
Kamouflage 120	300x385 mm ≤ Kamouflage 1V ≤ 700x1075 mm; 350x385 mm ≤ Kamouflage 2V ≤ 1100x1105 mm	Shaft	Desenfire THD ≥ 25 mm	EI 90 (v_{ed} i ↔ o) S 1500 AA multi
Kamouflage 120	300x385 mm ≤ Kamouflage 1V ≤ 700x1075 mm; 350x385 mm ≤ Kamouflage 2V ≤ 1100x1105 mm	Shaft	Desenfire HD ≥ 35 mm	EI 120 (v_{ed} i ↔ o) S 1500 AA multi
Kamouflage 120	300x385 mm ≤ Kamouflage 1V ≤ 700x1075 mm; 350x385 mm ≤ Kamouflage 2V ≤ 1100x1105 mm	Shaft	Desenfire ≥ 45 mm	EI 120 (v_{ed} i ↔ o) S 1500 AA multi
Kamouflage 120	300x385 mm ≤ Kamouflage 1V ≤ 700x1075 mm; 350x385 mm ≤ Kamouflage 2V ≤ 1100x1105 mm	Shaft	Desenfire STR ≥ 25 mm	EI 120 (v_{ed} i ↔ o) S 1500 AA multi

1

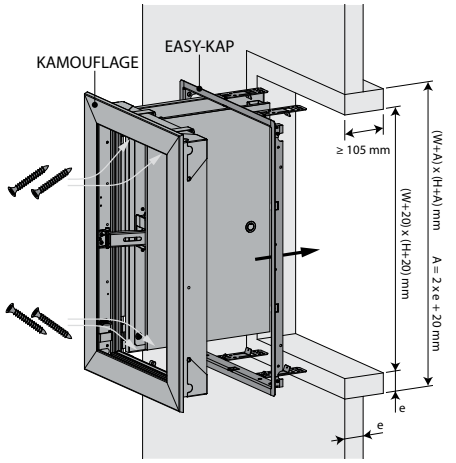

1. Installation with mounting frame:
Coat the edges of the opening with adhesive plaster, type FACILIS.
Seal the joints between uprights and cross pieces and between the lining and the wall with vegetable fibre caulking and plaster.
Two fixing lugs are provided at the bottom and at the top of the mounting frame: fold these against the sleeve. Caulk the mounting frame to the duct with vegetable fiber caulking and plaster and taking care not to misshape it. The finished opening must have the same size as the mounting frame (W+10) x (H+10) mm.

2

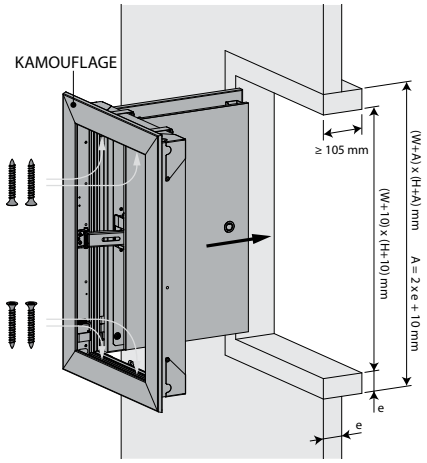

2. Installation without mounting frame:
Coat the edges of the opening with adhesive plaster, type FACILIS.
Seal the joints between uprights and cross pieces and between the lining and the wall with vegetable fibre caulking and plaster.

Installation at minimal distances

1

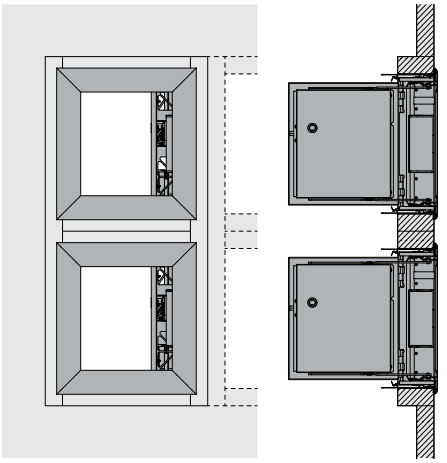

1. The shutters can be installed at minimal distance on top of or next to each other, if they are mounted in separate sleeves made from the shaft material with the required fire resistance. It is advised not to exceed a 2 x 4 configuration (H x W).

2

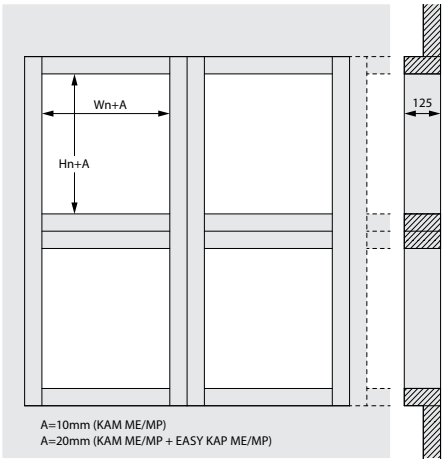

2. In case several shutters are mounted at a minimal distance, the bearing and reinforcement points of the shaft must be adjusted in proportion to the increased weight. The installation of the shaft must comply with the classification report delivered by the shaft manufacturer.

3

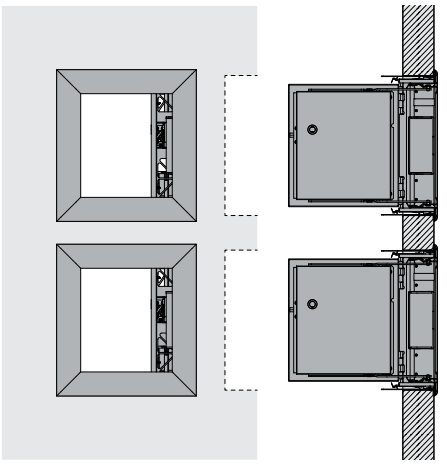

3. When mounting in a concrete shaft, you need to provide a continuous reinforcement in the vertical columns of at least 4 x Ø 8 mm.

4

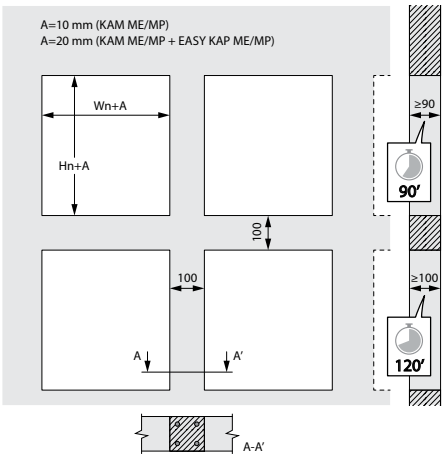

Smoke Management Systems Ltd.
Unit 2, Kilcarbery Park, New Nangor Rd.
Clondalkin, Dublin D22K207, Rep of Ireland
info@smokemanagement.ie
www.smokemanagement.ie

Installation

Finishing

1

1. The upper face of the shutter consists of a sheet of plasterboard, which you can decorate to match the wall in which the shutter is installed (paint or wallpaper).
A coat of paint can be applied on the unexposed face of the shutter and the frame; wallpaper can be applied to the shutter.
Covering plate of plasterboard: fill the holes of the screws with a suitable filler. Let it dry and sand. Apply a primer paint suitable for plasterboard.
Profile of anodised aluminium: apply a primer suitable for metal. With the option PRIM, the frame is already prepared with a primer, ready to be painted.
Once the primer is dry, proceed with the finishing (paint or wallpaper).

⚠ Caution : don't fill / cover the joint between the covering plate and the aluminium profile in order to guarantee that the shutter can open.

The options ATOUT RAL9010 / ALU (ALU not available on ceiling (P) model) and PRIM facilitate the finishing phase. With option ATOUT RAL9010 / ALU the shutter is supplied with a finished aspect, laquered white or aluminium. With option PRIM the profile is pre-painted with a primer.

Maintenance

- No specific maintenance required.
- Schedule at least two running visual checks each year.
- Remove dust and all other particles before start-up.
- Follow the local maintenance regulations (i.e. BS9999 Annex V; NF S 61-933) and EN13306.

Operation: general points

- See under 'Installation'.
  - ⚠ Caution : please note dampers must be fully open before starting supply and/or extract fans.

VA MEC Remote controlled unlocking by a magnet.

Remote controlled unlocking by an electric impulse (VD) or by interruption (VM) of the magnet's power supply.

Options - at the time of order

VD24	Natural magnet 24 V DC
VD48	Natural magnet 48 V DC
VM24	Electromagnet 24 V DC (not applicable for ME and H model)
VM48	Electromagnet 48 V DC (not applicable for ME and H model)
FDCU	Limit switch 'open/closed' (Incl. exc. for H model)
FDCB	Auxiliary limit switch 'open/closed'

Unlocking

- **manual unlocking**: with the key (delivered in the bag together with the installation guidelines)
- **automatic unlocking**: n/a
- **remote unlocking**: by electrical impulse (VD) or interruption (VM) of current to the magnet.

Resetting

- **manual resetting**: with the key (delivered in the bag together with the installation guidelines)

Electrical connection

VA MEC

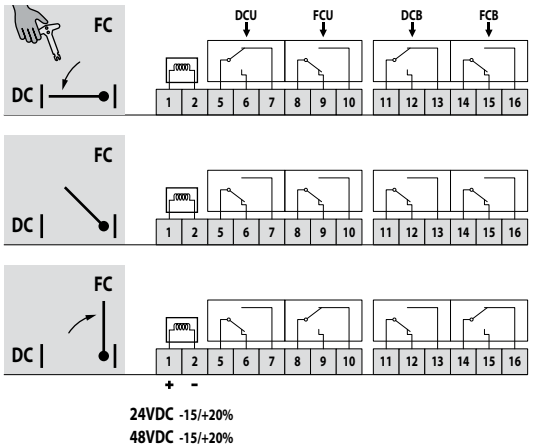

DC : Switch closed position smoke evacuation shutter
FC : Switch open position smoke evacuation shutter

MEC	Nominal voltage motor	Nominal voltage magnet	Power consumption (stand-by)	Power consumption (operating)	Standard switches	Protection class
VA MEC	N/A	24/48 V DC	VM: 1,5W / VD: -	VM: - / VD: 3,5W	1mA...6A, DC 5V...AC 250V	IP 42

Smoke Management Systems Ltd.
Unit 2, Kilcarbery Park, New Nangor Rd.
Clondalkin, Dublin D22K207, Rep of Ireland
info@smokemanagement.ie
www.smokemanagement.ie

Weights

KAMOUFLAGE 1V60 - 1V120

Hn\Wn [mm]		300	350	400	450	500	550	600	650	700						
385	kg	8,4	8,7	8,9	9,2	9,9	10,5	11,4	12,3	13,2						
415	kg	8,8	9,4	10,0	10,6	11,2	11,8	12,4	13,1	13,7						
445	kg	8,0	8,8	9,6	10,3	11,1	11,9	12,6	13,4	14,2						
475	kg	8,3	9,1	9,9	10,7	11,5	12,3	13,1	13,9	14,7						
505	kg	8,6	9,5	10,3	11,1	11,9	12,7	13,6	14,4	15,2						
535	kg	9,2	10,2	11,1	12,0	13,0	13,9	14,8	15,8	16,7						
565	kg	9,5	10,5	11,4	12,4	13,4	14,3	15,3	16,2	17,2						
595	kg	10,0	10,9	11,9	12,8	13,8	14,8	15,7	16,7	17,6						
625	kg	10,7	11,5	12,4	13,2	13,9	15,1	16,1	17,1	18,1						
655	kg	11,0	11,8	12,7	13,5	14,3	15,5	16,6	17,6	18,6						
685	kg	11,3	12,1	13,0	13,9	14,6	15,9	17,0	18,0	19,1						
715	kg	10,9	12,0	13,1	14,2	14,9	16,3	17,4	18,5	20,7						
745	kg	11,2	12,3	13,4	14,5	15,3	16,7	17,8	18,9	21,2						
775	kg	11,4	12,6	13,7	14,9	15,6	17,1	18,2	19,4	21,7						
805	kg	11,7	12,9	14,0	15,2	15,9	17,5	18,7	19,8	22,2						
835	kg	12,0	13,1	14,3	15,5	16,3	17,9	19,1	20,3	22,7						
865	kg	12,2	13,4	14,6	15,9	16,6	18,2	19,5	20,7	23,1						
895	kg	14,5	15,5	16,6	17,6	18,3	18,6	19,9	21,2	23,6						
925	kg	14,9	15,9	17,0	18,0	18,8	19,0	20,3	21,6	25,5						
955	kg	15,2	16,3	17,4	18,4	19,2	19,4	20,7	22,1	26,0						
985	kg	15,6	16,7	17,8	18,9	19,7	19,8	21,2	22,5	26,5						
1015	kg	16,0	17,1	18,2	19,3	20,1	20,2	21,6	23,0	27,0						
1045	kg	16,4	17,6	18,7	19,8	20,6	20,6	22,0	23,4	27,4						
1075	kg	16,8	18,0	19,1	20,2	21,0	23,6	25,2	26,7	28,3						

KAMOUFLAGE 2V60 - 2V120

Hn\Wn [mm]		350	400	450	500	550	600	650	700	750	800	850	900	950	1000	1050	1100
385	kg	9,2	9,9	10,7	11,4	11,8	12,6	13,3	14,1	14,6	15,3	16,0	16,5	17,3	18,0	18,8	20,4
415	kg	9,8	10,1	10,9	11,6	12,4	13,2	14,0	14,8	15,6	16,3	17,1	17,9	18,7	19,5	20,3	21,5
445	kg	10,3	11,1	12,0	12,8	13,6	14,4	15,2	16,1	16,9	17,7	18,5	19,4	20,2	21,0	21,8	22,7
475	kg	10,2	11,1	12,0	12,9	13,8	14,7	15,6	16,5	17,4	18,3	19,3	20,2	21,1	22,0	22,9	23,8
505	kg	10,7	11,6	12,6	13,5	14,5	15,4	16,4	17,3	18,3	19,2	20,2	21,1	22,1	23,0	24,0	24,9
535	kg	11,1	12,0	13,0	14,0	15,0	16,0	17,0	18,0	19,0	20,0	21,0	22,0	23,0	24,0	25,0	26,0
565	kg	11,5	12,5	13,6	14,6	15,7	16,7	17,7	18,8	19,8	20,8	21,9	22,9	24,0	25,0	26,0	27,1
595	kg	11,8	12,6	13,7	14,8	15,9	17,0	18,1	19,2	20,3	21,4	22,4	23,5	24,6	25,7	26,8	28,2
625	kg	12,3	13,4	14,5	15,7	16,8	17,9	19,1	20,2	21,4	22,5	23,6	24,8	25,9	27,0	28,2	29,3
655	kg	12,7	13,8	15,0	16,2	17,4	18,6	19,8	20,9	22,1	23,3	24,5	25,7	26,8	28,0	29,2	30,4
685	kg	14,4	15,5	16,6	17,8	18,9	20,1	21,2	22,4	23,5	24,6	25,8	26,9	28,1	29,2	30,3	31,5
715	kg	14,8	16,0	17,2	18,4	19,5	20,7	21,9	23,1	24,3	25,5	26,6	27,8	29,0	30,2	31,4	32,5
745	kg	15,2	16,5	17,7	18,9	20,1	21,3	22,5	23,8	25,0	26,2	27,4	28,6	29,8	31,1	32,3	33,5
775	kg	15,7	17,1	18,4	19,6	20,9	22,1	23,4	24,6	25,9	27,1	28,4	29,6	30,9	32,1	33,4	34,4
805	kg	16,1	17,4	18,7	20,0	21,3	22,5	23,8	25,1	26,4	27,7	29,0	30,2	31,5	32,8	34,1	35,4
835	kg	16,6	17,9	19,2	20,5	21,8	23,1	24,5	25,8	27,1	28,4	29,7	31,0	32,4	33,7	35,0	36,3
865	kg	17,0	18,4	19,8	21,2	22,6	24,0	20,9	22,3	23,7	25,2	26,6	28,0	29,4	30,8	32,2	38,1
895	kg	17,4	18,9	20,7	22,1	23,6	25,0	26,4	27,9	29,3	30,7	32,2	33,6	35,1	36,5	37,9	39,0
925	kg	17,9	19,4	20,8	22,3	23,8	25,2	26,7	28,2	29,7	31,1	32,6	34,1	35,5	37,0	38,5	40,0
955	kg	18,3	19,9	21,4	22,9	24,5	26,0	27,6	29,1	30,6	32,2	33,7	35,2	36,8	38,3	39,9	41,4
985	kg	18,8	20,3	21,9	23,9	25,0	26,6	28,2	29,7	31,3	32,9	34,4	36,0	37,6	39,2	40,7	42,3
1015	kg	19,2	20,8	22,5	24,1	25,7	27,3	28,9	30,6	32,2	33,8	35,4	37,1	38,7	40,3	41,9	43,5
1045	kg	19,6	21,3	23,0	24,6	26,3	27,9	29,6	31,2	32,9	34,6	36,2	37,9	39,5	41,2	42,8	44,5
1075	kg	20,1	21,8	23,5	25,2	26,8	28,5	30,2	31,9	33,6	35,3	37,0	38,7	40,4	42,0	43,7	45,4
1105	kg	20,5	22,3	24,1	25,8	28,0	29,7	31,5	33,3	34,5	36,1	37,8	39,5	41,3	43,1	44,8	47,0

Smoke Management Systems Ltd.
Unit 2, Kilcarbery Park, New Nangor Rd.
Clondalkin, Dublin D22K207, Rep of Ireland
info@smokemanagement.ie
www.smokemanagement.ie

ATOUT 1V RAL9010

Hn\Wn [mm]		300	350	400	450	500	550	600	650	700						
385	kg	0,3	0,4	0,4	0,5	0,5	0,6	0,7	0,7	0,8						
415	kg	0,3	0,4	0,5	0,5	0,6	0,7	0,7	0,8	0,9						
445	kg	0,4	0,4	0,5	0,6	0,6	0,7	0,8	0,9	0,9						
475	kg	0,4	0,5	0,5	0,6	0,7	0,8	0,9	0,9	1,0						
505	kg	0,4	0,5	0,6	0,7	0,7	0,8	0,9	1,0	1,1						
535	kg	0,4	0,5	0,6	0,7	0,8	0,9	1,0	1,1	1,2						
565	kg	0,5	0,6	0,7	0,8	0,8	0,9	1,0	1,1	1,2						
595	kg	0,5	0,6	0,7	0,8	0,9	1,0	1,1	1,2	1,3						
625	kg	0,5	0,6	0,7	0,8	1,0	1,1	1,2	1,3	1,4						
655	kg	0,5	0,7	0,8	0,9	1,0	1,1	1,2	1,3	1,5						
685	kg	0,6	0,7	0,8	0,9	1,1	1,2	1,3	1,4	1,5						
715	kg	0,6	0,7	0,9	1,0	1,1	1,2	1,4	1,5	1,6						
745	kg	0,6	0,8	0,9	1,0	1,2	1,3	1,4	1,6	1,7						
775	kg	0,7	0,8	0,9	1,1	1,2	1,3	1,5	1,6	1,8						
805	kg	0,7	0,8	1,0	1,1	1,3	1,4	1,5	1,7	1,8						
835	kg	0,7	0,9	1,0	1,2	1,3	1,5	1,6	1,8	1,9						
865	kg	0,7	0,9	1,0	1,2	1,4	1,5	1,7	1,8	2,0						
895	kg	0,8	0,9	1,1	1,2	1,4	1,6	1,7	1,9	2,1						
925	kg	0,8	1,0	1,1	1,3	1,5	1,6	1,8	2,0	2,1						
955	kg	0,8	1,0	1,2	1,3	1,5	1,7	1,9	2,0	2,2						
985	kg	0,8	1,0	1,2	1,4	1,6	1,7	1,9	2,1	2,3						
1015	kg	0,9	1,1	1,2	1,4	1,6	1,8	2,0	2,2	2,4						
1045	kg	0,9	1,1	1,3	1,5	1,7	1,9	2,0	2,2	2,4						
1075	kg	0,9	1,1	1,3	1,5	1,7	1,9	2,1	2,3	2,5						

ATOUT 2V RAL9010

Hn\Wn [mm]		350	400	450	500	550	600	650	700	750	800	850	900	950	1000	1050	1100
385	kg	0,3	0,4	0,4	0,5	0,5	0,6	0,7	0,7	0,8	0,9	0,9	1,0	1,0	1,1	1,2	1,2
415	kg	0,3	0,4	0,5	0,5	0,6	0,7	0,7	0,8	0,9	0,9	1,0	1,1	1,1	1,2	1,3	1,3
445	kg	0,4	0,4	0,5	0,6	0,6	0,7	0,8	0,9	0,9	1,0	1,1	1,2	1,2	1,3	1,4	1,5
475	kg	0,4	0,5	0,5	0,6	0,7	0,8	0,9	0,9	1,0	1,1	1,2	1,3	1,3	1,4	1,5	1,6
505	kg	0,4	0,5	0,6	0,7	0,7	0,8	0,9	1,0	1,1	1,2	1,3	1,3	1,4	1,5	1,6	1,7
535	kg	0,4	0,5	0,6	0,7	0,8	0,9	1,0	1,1	1,2	1,3	1,3	1,4	1,5	1,6	1,7	1,8
565	kg	0,5	0,6	0,7	0,8	0,9	0,9	1,0	1,1	1,2	1,3	1,4	1,5	1,6	1,7	1,8	1,9
595	kg	0,5	0,6	0,7	0,8	0,9	1,0	1,1	1,2	1,3	1,4	1,5	1,6	1,7	1,8	1,9	2,0
625	kg	0,5	0,6	0,7	0,8	1,0	1,1	1,2	1,3	1,4	1,5	1,6	1,7	1,8	1,9	2,0	2,2
655	kg	0,5	0,7	0,8	0,9	1,0	1,1	1,2	1,3	1,5	1,6	1,7	1,8	1,9	2,0	2,2	2,3
685	kg	0,6	0,7	0,8	0,9	1,1	1,2	1,3	1,4	1,5	1,7	1,8	1,9	2,0	2,1	2,3	2,4
715	kg	0,6	0,7	0,9	1,0	1,1	1,2	1,4	1,5	1,6	1,7	1,9	2,0	2,1	2,2	2,4	2,5
745	kg	0,6	0,8	0,9	1,0	1,2	1,3	1,4	1,6	1,7	1,8	2,0	2,1	2,2	2,3	2,5	2,6
775	kg	0,7	0,8	0,9	1,1	1,2	1,3	1,5	1,6	1,8	1,9	2,0	2,2	2,3	2,5	2,6	2,7
805	kg	0,7	0,8	1,0	1,1	1,3	1,4	1,5	1,7	1,8	2,0	2,1	2,3	2,4	2,6	2,7	2,8
835	kg	0,7	0,9	1,0	1,2	1,3	1,5	1,6	1,8	1,9	2,1	2,2	2,4	2,5	2,7	2,8	3,0
865	kg	0,7	0,9	1,0	1,2	1,4	1,5	1,7	1,8	2,0	2,1	2,3	2,5	2,6	2,8	2,9	3,1
895	kg	0,8	0,9	1,1	1,2	1,4	1,6	1,7	1,9	2,1	2,2	2,4	2,5	2,7	2,9	3,0	3,2
925	kg	0,8	1,0	1,1	1,3	1,5	1,6	1,8	2,0	2,1	2,3	2,5	2,6	2,8	3,0	3,1	3,3
955	kg	0,8	1,0	1,2	1,3	1,5	1,7	1,9	2,0	2,2	2,4	2,6	2,7	2,9	3,1	3,2	3,4
985	kg	0,8	1,0	1,2	1,4	1,6	1,7	1,9	2,1	2,3	2,5	2,6	2,8	3,0	3,2	3,4	3,5
1015	kg	0,9	1,1	1,2	1,4	1,6	1,8	2,0	2,2	2,4	2,5	2,7	2,9	3,1	3,3	3,5	3,6
1045	kg	0,9	1,1	1,3	1,5	1,7	1,9	2,0	2,2	2,4	2,6	2,8	3,0	3,2	3,4	3,6	3,8
1075	kg	0,9	1,1	1,3	1,5	1,7	1,9	2,1	2,3	2,5	2,7	2,9	3,1	3,3	3,5	3,7	3,9
1105	kg	1,0	1,2	1,4	1,6	1,8	2,0	2,2	2,4	2,6	2,8	3,0	3,2	3,4	3,6	3,8	4,0

Smoke Management Systems Ltd.
Unit 2, Kilcarbery Park, New Nangor Rd.
Clondalkin, Dublin D22K207, Rep of Ireland
info@smokemanagement.ie
www.smokemanagement.ie

Weights

ATOUT 1V ALU

Hn\Wn [mm]		300	350	400	450	500	550	600	650	700						
385	kg	0,2	0,2	0,2	0,3	0,3	0,3	0,4	0,4	0,4						
415	kg	0,2	0,2	0,3	0,3	0,3	0,4	0,4	0,5	0,5						
445	kg	0,2	0,2	0,3	0,3	0,4	0,4	0,5	0,5	0,5						
475	kg	0,2	0,3	0,3	0,4	0,4	0,4	0,5	0,5	0,6						
505	kg	0,2	0,3	0,3	0,4	0,4	0,5	0,5	0,6	0,6						
535	kg	0,2	0,3	0,3	0,4	0,5	0,5	0,6	0,6	0,7						
565	kg	0,3	0,3	0,4	0,4	0,5	0,5	0,6	0,6	0,7						
595	kg	0,3	0,3	0,4	0,5	0,5	0,6	0,6	0,7	0,7						
625	kg	0,3	0,4	0,4	0,5	0,5	0,6	0,7	0,7	0,8						
655	kg	0,3	0,4	0,4	0,5	0,6	0,6	0,7	0,8	0,8						
685	kg	0,3	0,4	0,5	0,5	0,6	0,7	0,7	0,8	0,9						
715	kg	0,3	0,4	0,5	0,6	0,6	0,7	0,8	0,8	0,9						
745	kg	0,4	0,4	0,5	0,6	0,7	0,7	0,8	0,9	1,0						
775	kg	0,4	0,4	0,5	0,6	0,7	0,8	0,8	0,9	1,0						
805	kg	0,4	0,5	0,5	0,6	0,7	0,8	0,9	1,0	1,0						
835	kg	0,4	0,5	0,6	0,7	0,7	0,8	0,9	1,0	1,1						
865	kg	0,4	0,5	0,6	0,7	0,8	0,9	0,9	1,0	1,1						
895	kg	0,4	0,5	0,6	0,7	0,8	0,9	1,0	1,1	1,2						
925	kg	0,4	0,5	0,6	0,7	0,8	0,9	1,0	1,1	1,2						
955	kg	0,5	0,6	0,7	0,8	0,9	1,0	1,0	1,1	1,2						
985	kg	0,5	0,6	0,7	0,8	0,9	1,0	1,1	1,2	1,3						
1015	kg	0,5	0,6	0,7	0,8	0,9	1,0	1,1	1,2	1,3						
1045	kg	0,5	0,6	0,7	0,8	0,9	1,0	1,2	1,3	1,4						
1075	kg	0,5	0,6	0,7	0,9	1,0	1,1	1,2	1,3	1,4						

ATOUT 2V ALU

Hn\Wn [mm]		350	400	450	500	550	600	650	700	750	800	850	900	950	1000	1050	1100
385	kg	0,2	0,2	0,2	0,3	0,3	0,3	0,4	0,4	0,5	0,5	0,5	0,6	0,6	0,6	0,7	0,7
415	kg	0,2	0,2	0,3	0,3	0,3	0,4	0,4	0,5	0,5	0,5	0,6	0,6	0,6	0,7	0,7	0,8
445	kg	0,2	0,2	0,3	0,3	0,4	0,4	0,5	0,5	0,5	0,6	0,6	0,7	0,7	0,7	0,8	0,8
475	kg	0,2	0,3	0,3	0,4	0,4	0,4	0,5	0,5	0,6	0,6	0,7	0,7	0,8	0,8	0,8	0,9
505	kg	0,2	0,3	0,3	0,4	0,4	0,5	0,5	0,6	0,6	0,7	0,7	0,8	0,8	0,9	0,9	1,0
535	kg	0,2	0,3	0,4	0,4	0,5	0,5	0,6	0,6	0,7	0,7	0,8	0,8	0,9	0,9	1,0	1,0
565	kg	0,3	0,3	0,4	0,4	0,5	0,5	0,6	0,6	0,7	0,8	0,8	0,9	0,9	1,0	1,0	1,1
595	kg	0,3	0,3	0,4	0,5	0,5	0,6	0,6	0,7	0,7	0,8	0,9	0,9	1,0	1,0	1,1	1,2
625	kg	0,3	0,4	0,4	0,5	0,5	0,6	0,7	0,7	0,8	0,8	0,9	1,0	1,0	1,1	1,2	1,2
655	kg	0,3	0,4	0,4	0,5	0,6	0,6	0,7	0,8	0,8	0,9	1,0	1,0	1,1	1,2	1,2	1,3
685	kg	0,3	0,4	0,5	0,5	0,6	0,7	0,7	0,8	0,9	0,9	1,0	1,1	1,1	1,2	1,3	1,3
715	kg	0,3	0,4	0,5	0,6	0,6	0,7	0,8	0,8	0,9	1,0	1,1	1,1	1,2	1,3	1,3	1,4
745	kg	0,4	0,4	0,5	0,6	0,7	0,7	0,8	0,9	1,0	1,0	1,1	1,2	1,3	1,3	1,4	1,5
775	kg	0,4	0,4	0,5	0,6	0,7	0,8	0,8	0,9	1,0	1,1	1,2	1,2	1,3	1,4	1,5	1,5
805	kg	0,4	0,5	0,5	0,6	0,7	0,8	0,9	1,0	1,0	1,1	1,2	1,3	1,4	1,4	1,5	1,6
835	kg	0,4	0,5	0,6	0,7	0,7	0,8	0,9	1,0	1,1	1,2	1,2	1,3	1,4	1,5	1,6	1,7
865	kg	0,4	0,5	0,6	0,7	0,8	0,9	0,9	1,0	1,1	1,2	1,3	1,4	1,5	1,6	1,6	1,7
895	kg	0,4	0,5	0,6	0,7	0,8	0,9	1,0	1,1	1,2	1,3	1,3	1,4	1,5	1,6	1,7	1,8
925	kg	0,4	0,5	0,6	0,7	0,8	0,9	1,0	1,1	1,2	1,3	1,4	1,5	1,6	1,7	1,8	1,9
955	kg	0,5	0,6	0,7	0,8	0,9	1,0	1,1	1,1	1,2	1,3	1,4	1,5	1,6	1,7	1,8	1,9
985	kg	0,5	0,6	0,7	0,8	0,9	1,0	1,1	1,2	1,3	1,4	1,5	1,6	1,7	1,8	1,9	2,0
1015	kg	0,5	0,6	0,7	0,8	0,9	1,0	1,1	1,2	1,3	1,4	1,5	1,6	1,7	1,9	2,0	2,1
1045	kg	0,5	0,6	0,7	0,8	0,9	1,0	1,2	1,3	1,4	1,5	1,6	1,7	1,8	1,9	2,0	2,1
1075	kg	0,5	0,6	0,7	0,9	1,0	1,1	1,2	1,3	1,4	1,5	1,6	1,7	1,9	2,0	2,1	2,2
1105	kg	0,5	0,7	0,8	0,9	1,0	1,1	1,2	1,3	1,5	1,6	1,7	1,8	1,9	2,0	2,1	2,3

$$\Delta p = 0{,}6 \times v^2 \times \zeta$$

KAMOUFLAGE 1V60 - 1V120

Hn\Wn [mm]		300	350	400	450	500	550	600	650	700
385	ζ [-]	4,621	3,603	2,960	2,518	2,196	1,950	1,757	1,600	1,471
415	ζ [-]	4,142	3,237	2,663	2,267	1,978	1,758	1,585	1,444	1,328
445	ζ [-]	3,757	2,940	2,422	2,064	1,802	1,602	1,445	1,317	1,212
475	ζ [-]	3,439	2,696	2,222	1,895	1,656	1,473	1,329	1,212	1,115
505	ζ [-]	3,174	2,491	2,055	1,754	1,533	1,364	1,231	1,123	1,033
535	ζ [-]	2,948	2,316	1,913	1,633	1,428	1,271	1,147	1,047	0,963
565	ζ [-]	2,754	2,166	1,790	1,529	1,337	1,191	1,075	0,981	0,903
595	ζ [-]	2,586	2,035	1,683	1,438	1,258	1,121	1,012	0,923	0,850
625	ζ [-]	2,438	1,920	1,588	1,358	1,189	1,059	0,956	0,873	0,804
655	ζ [-]	2,307	1,818	1,505	1,287	1,127	1,004	0,907	0,828	0,762
685	ζ [-]	2,191	1,728	1,430	1,223	1,071	0,955	0,862	0,787	0,725
715	ζ [-]	2,086	1,646	1,363	1,166	1,022	0,911	0,823	0,751	0,692
745	ζ [-]	1,992	1,572	1,303	1,115	0,977	0,871	0,787	0,718	0,662
775	ζ [-]	1,907	1,506	1,248	1,068	0,936	0,834	0,754	0,689	0,634
805	ζ [-]	1,829	1,445	1,198	1,025	0,899	0,801	0,724	0,661	0,609
835	ζ [-]	1,757	1,389	1,152	0,986	0,864	0,771	0,697	0,636	0,586
865	ζ [-]	1,692	1,338	1,109	0,950	0,833	0,743	0,671	0,613	0,565
895	ζ [-]	1,631	1,290	1,070	0,917	0,804	0,717	0,648	0,592	0,546
925	ζ [-]	1,575	1,246	1,034	0,886	0,777	0,693	0,626	0,572	0,527
955	ζ [-]	1,524	1,206	1,001	0,857	0,752	0,671	0,606	0,554	0,511
985	ζ [-]	1,475	1,168	0,969	0,831	0,728	0,650	0,588	0,537	0,495
1015	ζ [-]	1,430	1,132	0,940	0,806	0,707	0,630	0,570	0,521	0,480
1045	ζ [-]	1,388	1,099	0,913	0,782	0,686	0,612	0,554	0,506	0,466
1075	ζ [-]	1,349	1,068	0,887	0,760	0,667	0,595	0,538	0,492	0,453

KAMOUFLAGE 2V60 - 2V120

Hn\Wn [mm]		350	400	450	500	550	600	650	700	750	800	850	900	950	1000	1050	1100
385	ζ [-]	6,807	5,315	4,378	3,736	3,268	2,912	2,631	2,404	2,217	2,059	1,924	1,808	1,706	1,617	1,537	1,466
415	ζ [-]	6,126	4,793	3,954	3,378	2,957	2,636	2,384	2,179	2,010	1,867	1,745	1,640	1,548	1,467	1,395	1,330
445	ζ [-]	5,576	4,371	3,610	3,086	2,704	2,412	2,181	1,995	1,840	1,710	1,599	1,503	1,419	1,345	1,279	1,220
475	ζ [-]	5,123	4,022	3,325	2,845	2,494	2,225	2,013	1,842	1,699	1,580	1,477	1,389	1,311	1,243	1,182	1,128
505	ζ [-]	4,743	3,728	3,085	2,641	2,316	2,068	1,871	1,712	1,580	1,469	1,374	1,292	1,220	1,156	1,100	1,049
535	ζ [-]	4,419	3,477	2,879	2,467	2,164	1,933	1,749	1,601	1,478	1,374	1,285	1,209	1,142	1,082	1,029	0,982
565	ζ [-]	4,140	3,261	2,702	2,316	2,032	1,816	1,644	1,505	1,389	1,292	1,209	1,137	1,074	1,018	0,968	0,924
595	ζ [-]	3,897	3,072	2,547	2,184	1,917	1,713	1,552	1,420	1,312	1,220	1,141	1,073	1,014	0,961	0,915	0,873
625	ζ [-]	3,683	2,906	2,411	2,068	1,816	1,623	1,470	1,346	1,243	1,156	1,082	1,018	0,961	0,911	0,867	0,827
655	ζ [-]	3,494	2,759	2,289	1,964	1,725	1,542	1,397	1,280	1,182	1,099	1,029	0,968	0,914	0,867	0,825	0,787
685	ζ [-]	3,325	2,627	2,181	1,872	1,645	1,470	1,332	1,220	1,127	1,049	0,981	0,923	0,872	0,827	0,787	0,751
715	ζ [-]	3,173	2,508	2,083	1,789	1,572	1,405	1,274	1,167	1,078	1,003	0,938	0,883	0,834	0,791	0,753	0,718
745	ζ [-]	3,036	2,401	1,995	1,713	1,506	1,347	1,221	1,118	1,033	0,961	0,900	0,846	0,800	0,758	0,722	0,689
775	ζ [-]	2,912	2,304	1,915	1,644	1,446	1,293	1,172	1,074	0,992	0,923	0,864	0,813	0,768	0,729	0,693	0,662
805	ζ [-]	2,798	2,215	1,841	1,582	1,391	1,244	1,128	1,033	0,955	0,888	0,832	0,782	0,739	0,701	0,667	0,637
835	ζ [-]	2,694	2,133	1,774	1,524	1,340	1,199	1,087	0,996	0,920	0,857	0,802	0,754	0,713	0,676	0,644	0,614
865	ζ [-]	2,598	2,058	1,712	1,471	1,294	1,158	1,050	0,962	0,889	0,827	0,774	0,729	0,688	0,653	0,622	0,593
895	ζ [-]	2,509	1,988	1,654	1,422	1,251	1,119	1,015	0,930	0,859	0,800	0,749	0,705	0,666	0,632	0,601	0,574
925	ζ [-]	2,427	1,924	1,601	1,376	1,211	1,083	0,983	0,900	0,832	0,775	0,725	0,682	0,645	0,612	0,582	0,556
955	ζ [-]	2,351	1,864	1,551	1,334	1,173	1,050	0,953	0,873	0,807	0,751	0,703	0,662	0,625	0,593	0,565	0,539
985	ζ [-]	2,280	1,808	1,505	1,294	1,139	1,019	0,924	0,847	0,783	0,729	0,683	0,642	0,607	0,576	0,548	0,523
1015	ζ [-]	2,213	1,756	1,462	1,257	1,106	0,990	0,898	0,823	0,761	0,708	0,663	0,624	0,590	0,560	0,533	0,508
1045	ζ [-]	2,151	1,707	1,421	1,223	1,076	0,963	0,874	0,801	0,740	0,689	0,645	0,607	0,574	0,544	0,518	0,495
1075	ζ [-]	2,093	1,661	1,383	1,190	1,047	0,938	0,851	0,780	0,721	0,671	0,628	0,591	0,559	0,530	0,505	0,482
1105	ζ [-]	2,038	1,618	1,347	1,159	1,020	0,914	0,829	0,760	0,702	0,654	0,612	0,576	0,545	0,517	0,492	0,469

Smoke Management Systems Ltd.
Unit 2, Kilcarbery Park, New Nangor Rd.
Clondalkin, Dublin D22K207, Rep of Ireland
info@smokemanagement.ie
www.smokemanagement.ie

Selection data

KAMOUFLAGE 1V60 - 1V120 - Free air passage (m²)

Hn\Wn [mm]		300	350	400	450	500	550	600	650	700			
385	Sn [m²]	0,0980	0,1160	0,1340	0,1520	0,1700	0,1880	0,2060	0,2240	0,2420			
415	Sn [m²]	0,1070	0,1260	0,1450	0,1650	0,1840	0,2040	0,2230	0,2430	0,2620			
445	Sn [m²]	0,1150	0,1360	0,1570	0,1780	0,1990	0,2200	0,2410	0,2610	0,2820			
475	Sn [m²]	0,1230	0,1450	0,1680	0,1900	0,2130	0,2350	0,2580	0,2800	0,3030			
505	Sn [m²]	0,1310	0,1550	0,1790	0,2030	0,2270	0,2510	0,2750	0,2990	0,3230			
535	Sn [m²]	0,1390	0,1650	0,1900	0,2160	0,2410	0,2670	0,2920	0,3180	0,3430			
565	Sn [m²]	0,1480	0,1750	0,2020	0,2290	0,2550	0,2820	0,3090	0,3360	0,3630			
595	Sn [m²]	0,1560	0,1840	0,2130	0,2410	0,2700	0,2980	0,3270	0,3550	0,3840			
625	Sn [m²]	0,1640	0,1940	0,2240	0,2540	0,2840	0,3140	0,3440	0,3740	0,4040			
655	Sn [m²]	0,1720	0,2040	0,2350	0,2670	0,2980	0,3300	0,3610	0,3920	0,4240			
685	Sn [m²]	0,1810	0,2140	0,2460	0,2790	0,3120	0,3450	0,3780	0,4110	0,4440			
715	Sn [m²]	0,1890	0,2230	0,2580	0,2920	0,3270	0,3610	0,3950	0,4300	0,4640			
745	Sn [m²]	0,1970	0,2330	0,2690	0,3050	0,3410	0,3770	0,4130	0,4490	0,4850			
775	Sn [m²]	0,2050	0,2430	0,2800	0,3180	0,3550	0,3920	0,4300	0,4670	0,5050			
805	Sn [m²]	0,2130	0,2520	0,2910	0,3300	0,3690	0,4080	0,4470	0,4860	0,5250			
835	Sn [m²]	0,2220	0,2620	0,3030	0,3430	0,3830	0,4240	0,4640	0,5050	0,5450			
865	Sn [m²]	0,2300	0,2720	0,3140	0,3560	0,3980	0,4400	0,4820	0,5240	0,5650			
895	Sn [m²]	0,2380	0,2820	0,3250	0,3680	0,4120	0,4550	0,4990	0,5420	0,5860			
925	Sn [m²]	0,2460	0,2910	0,3360	0,3810	0,4260	0,4710	0,5160	0,5610	0,6060			
955	Sn [m²]	0,2550	0,3010	0,3470	0,3940	0,4400	0,4870	0,5330	0,5800	0,6260			
985	Sn [m²]	0,2630	0,3110	0,3590	0,4070	0,4550	0,5030	0,5500	0,5980	0,6460			
1015	Sn [m²]	0,2710	0,3200	0,3700	0,4190	0,4690	0,5180	0,5680	0,6170	0,6670			
1045	Sn [m²]	0,2790	0,3300	0,3810	0,4320	0,4830	0,5340	0,5850	0,6360	0,6870			
1075	Sn [m²]	0,2870	0,3400	0,3920	0,4450	0,4970	0,5500	0,6020	0,6550	0,7070			

KAMOUFLAGE 2V60 - 2V120 - Free air passage (m²)

Hn\Wn [mm]		350	400	450	500	550	600	650	700	750	800	850	900	950	1000	1050	1100
385	Sn [m²]	0,0960	0,1140	0,1320	0,1500	0,1680	0,1860	0,2040	0,2220	0,2400	0,2580	0,2760	0,2940	0,3120	0,3290	0,3470	0,3650
415	Sn [m²]	0,1040	0,1240	0,1430	0,1630	0,1820	0,2010	0,2210	0,2400	0,2600	0,2790	0,2990	0,3180	0,3380	0,3570	0,3760	0,3960
445	Sn [m²]	0,1120	0,1330	0,1540	0,1750	0,1960	0,2170	0,2380	0,2590	0,2800	0,3010	0,3220	0,3430	0,3640	0,3850	0,4060	0,4260
475	Sn [m²]	0,1200	0,1430	0,1650	0,1880	0,2100	0,2320	0,2550	0,2770	0,3000	0,3220	0,3450	0,3670	0,3900	0,4120	0,4350	0,4570
505	Sn [m²]	0,1280	0,1520	0,1760	0,2000	0,2240	0,2480	0,2720	0,2960	0,3200	0,3440	0,3680	0,3920	0,4160	0,4400	0,4640	0,4880
535	Sn [m²]	0,1360	0,1620	0,1870	0,2130	0,2380	0,2640	0,2890	0,3140	0,3400	0,3650	0,3910	0,4160	0,4420	0,4670	0,4930	0,5180
565	Sn [m²]	0,1440	0,1710	0,1980	0,2250	0,2520	0,2790	0,3060	0,3330	0,3600	0,3870	0,4140	0,4410	0,4680	0,4950	0,5220	0,5490
595	Sn [m²]	0,1520	0,1810	0,2090	0,2380	0,2660	0,2950	0,3230	0,3520	0,3800	0,4080	0,4370	0,4650	0,4940	0,5220	0,5510	0,5790
625	Sn [m²]	0,1600	0,1900	0,2200	0,2500	0,2800	0,3100	0,3400	0,3700	0,4000	0,4300	0,4600	0,4900	0,5200	0,5500	0,5800	0,6100
655	Sn [m²]	0,1680	0,2000	0,2310	0,2630	0,2940	0,3260	0,3570	0,3890	0,4200	0,4510	0,4830	0,5140	0,5460	0,5770	0,6090	0,6400
685	Sn [m²]	0,1760	0,2090	0,2420	0,2750	0,3080	0,3410	0,3740	0,4070	0,4400	0,4730	0,5060	0,5390	0,5720	0,6050	0,6380	0,6710
715	Sn [m²]	0,1850	0,2190	0,2530	0,2880	0,3220	0,3570	0,3910	0,4260	0,4600	0,4950	0,5290	0,5630	0,5980	0,6320	0,6670	0,7010
745	Sn [m²]	0,1930	0,2280	0,2640	0,3000	0,3360	0,3720	0,4080	0,4440	0,4800	0,5160	0,5520	0,5880	0,6240	0,6600	0,6960	0,7320
775	Sn [m²]	0,2010	0,2380	0,2750	0,3130	0,3500	0,3880	0,4250	0,4630	0,5000	0,5380	0,5750	0,6130	0,6500	0,6870	0,7250	0,7620
805	Sn [m²]	0,2090	0,2480	0,2870	0,3250	0,3640	0,4030	0,4420	0,4810	0,5200	0,5590	0,5980	0,6370	0,6760	0,7150	0,7540	0,7930
835	Sn [m²]	0,2170	0,2570	0,2980	0,3380	0,3780	0,4190	0,4590	0,5000	0,5400	0,5810	0,6210	0,6620	0,7020	0,7430	0,7830	0,8230
865	Sn [m²]	0,2250	0,2670	0,3090	0,3510	0,3920	0,4340	0,4760	0,5180	0,5600	0,6020	0,6440	0,6860	0,7280	0,7700	0,8120	0,8540
895	Sn [m²]	0,2330	0,2760	0,3200	0,3630	0,4070	0,4500	0,4930	0,5370	0,5800	0,6240	0,6670	0,7110	0,7540	0,7980	0,8410	0,8840
925	Sn [m²]	0,2410	0,2860	0,3310	0,3760	0,4210	0,4660	0,5100	0,5550	0,6000	0,6450	0,6900	0,7350	0,7800	0,8250	0,8700	0,9150
955	Sn [m²]	0,2490	0,2950	0,3420	0,3880	0,4350	0,4810	0,5270	0,5740	0,6200	0,6670	0,7130	0,7600	0,8060	0,8530	0,8990	0,9460
985	Sn [m²]	0,2570	0,3050	0,3530	0,4010	0,4490	0,4970	0,5450	0,5920	0,6400	0,6880	0,7360	0,7840	0,8320	0,8800	0,9280	0,9760
1015	Sn [m²]	0,2650	0,3140	0,3640	0,4130	0,4630	0,5120	0,5620	0,6110	0,6600	0,7100	0,7590	0,8090	0,8580	0,9080	0,9570	1,0070
1045	Sn [m²]	0,2730	0,3240	0,3750	0,4260	0,4770	0,5280	0,5790	0,6300	0,6800	0,7310	0,7820	0,8330	0,8840	0,9350	0,9860	1,0370
1075	Sn [m²]	0,2810	0,3330	0,3860	0,4380	0,4910	0,5430	0,5960	0,6480	0,7010	0,7530	0,8050	0,8580	0,9100	0,9630	1,0150	1,0680
1105	Sn [m²]	0,2890	0,3430	0,3970	0,4510	0,5050	0,5590	0,6130	0,6670	0,7210	0,7750	0,8280	0,8820	0,9360	0,9900	1,0440	1,0980

Sample order

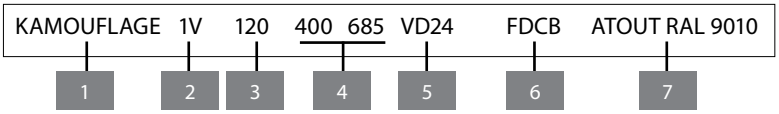

1. product
2. 1 shutter (1V) / 2 shutters (2V)
3. fire resistance of 60 or 120 minutes
4. width
5. height
6. option: type magnet and voltage
7. option: bipolar end of range switch (FDCU included)
8. option: frame painted white, shutter covered with white metallic sheet

Approvals and certificates

All our products are submitted to a number of tests by official test institutes. Reports of these tests form the basis for the approvals of the products.

CE
1812

Efectis_1812_CPR_1043

PAR AFNOR CERTIFICATION
NF
NF 537
CLAPETS RÉSISTANT AU FEU
VOLETS RÉSISTANT AU FEU
www.marque-nf.com

18.23 & 18.24

The NF-label guarantees: conformity with the standard NF S 61-937 Parts 1 and 10: “Systèmes de Sécurité Incendie Dispositifs Actionnés de Sécurité”; conformity with the national decree of March 22, 2004, changed on 14 March 2011 for the classification of fire resistance; the values of the characteristics mentioned in this document. Organisme Certificateur: AFNOR Certification, 11 Rue Francis de Pressensé, F93571 La Plaine Saint-Denis Cedex; Website: http://www.afnor.org http://www.marque-nf.com; Phone: +33 (0)1.41.62.80.00, Fax: +33 (0)1.49.17.90.00, Email: certification@afnor.org

If the product is manipulated in any other way than described in this manual, Rf-Technologies will decline any responsibility and the guarantee will expire!

Smoke Management Systems Ltd.
Unit 2, Kilcarbery Park, New Nangor Rd.
Clondalkin, Dublin D22K207, Rep of Ireland
info@smokemanagement.ie
www.smokemanagement.ie